DC INVERTER MULTI VRF
Service Manual
（T1/R410A/50Hz）

GREE ELECTRIC APPLIANCES INC. OF ZHUHAI

CONTENTS

PRODUCT 2
1 MODELS LIST 2
1.1 Outdoor Unit 2
1.2 Indoor Unit 3
2 NOMENCLATURE 8
2.1 Nomenclature of outdoor unit 8
2.2 Nomenclature of indoor unit 8
3 FUNCTION 9
4 PRODUCT DATA 10
4.1 Product data of outdoor 10
4.2 Product data of indoor 12
4.3 Operation Range 37
5 PIPING DIAGRAM 38
5.1 Cooling Only 38
5.2 Heat Pump 39
CONTROL 41
1 OPERATION FLOWCHART 41
1.1 Cooling/Dry Operation 42
1.2 Heating Operation 43
2 MAIN LOGIC 44
2.1 Control Function of Outdoor Unit 44
3 WIRELESS REMOTE CONTROLLER 59
4 WIRED CONTROLLER 62
4.1 Operation and Display View 62
4.2 Dimension 62
4.3 Installation 63
5 MINI CENTRALIZED CONTROLLER (REGION CONTROLLER) 64
5.1 Function 64
5.2 Operation View 65
5.3 Display View 66
5.4 Connection between Controller and Unit 67
6 CENTRALIZED CONTROLLER 68
6.1 Function 68
6.2 Operation View 68
6.3 Display View 70
6.4 Communication Network Connection 71
6.5 Case Study 72
7 MONITORING SOFTWARE 85
7.1 Function 85
7.2 Connection Between the Computer and the Unit 85
7.3 Hardware 87
INSTALLATION 94
1 PRECAUTIONS FOR INSTALLATION 94
1.1 Precautions for installation 94
1.2 Key Points of Installation 95
2 FLOW CHART OF INSTALLATION 97
3 INSTALLATION OF OUTDOOR UNIT 98
3.1 Cautions for installation of side discharge outdoor unit 98
3.2 Selection of Installation Site 98
3.3 Dimensions Data 99
3.4 Installation space requirements 99
4 INSTALLATION OF INDOOR UNIT 102
4.1 Duct Type 102
4.2 4-way cassett type Unit 109
4.3 Floor Ceiling Type 115
4.4 Wall mounted type 120
4.5 1-way cassett type Unit 122

4.6 cassette type indoor unit 127
5 INSTALLATION REQUIREMENTS OF REFRIGERANT PIPING 138
5.1 Specification of refrigerant pipe 138
5.2 Allowable Length and Height Differences of the Refrigerant Piping between the Indoor and Outdoor Units 138
5.3 Size of Connection Pipe 138
6 INSTALLATION OF REFRIGERANT PIPING 140
6.1 Flow Chart of Installation 140
6.2 Three Principles of Refrigerant Piping Installation 140
6.3 Installation of Metal Embedded Pipe 141
6.4 Installation of Carriage of Refrigerant pipin 141
6.5 Management and Machining of Refrigerant Piping 142
6.6 Installation of Refrigerant Piping 146
6.7 Welding of Copper Pipe 148
6.8 Cleaning of Refrigerant Piping 153
6.9 Pressure Maintaining and Leak Hunting 155
6.10 Heat Preservation of Refrigerant Piping 156
6.11 Vacuum Pumping 157
6.12 Refrigerant Charge 158
7 INSTALLATION OF ELECTRONIC EXPANSION VALVE ASSY 160
7.1 Direction Requirements 160
8 INSTALLATION OF CONDENSATE PIPE 162
8.1 Material quality requirements 162
8.2 Key points for installation 162
8.3 Installation of drainage hose for different types of indoor unit 166
8.4 Test for Condensate Pipe 170
8.5 Requirements of Heat Insulation 171
9 ELECTRICAL INSTALLATION 172
9.1 Precautions for Electrical Installation 172
9.2 Specifications of power cord & circuit breaker 172
9.3 Wiring Sketch Map 172
9.4 Dial-up 173
MAINTENANCE 179
1 List of Unit Errors 179
1.1 List of Error Display on Wired Controller 179
1.2 Display Code on Digital Tube of Outdoor Mainboard 182
1.3 Display of the number of indoor units 182
2 Flow chart of troubleshooting 183
3 WIRING DIADRAM 192
3.1 Outdoor unit 192
3.2 Indoor unit 193
4 DISASSEMBLY AND ASSEMBLY PROCEDURE OF MAIN PARTS 202
4.1 Removal and Assembly of Outdoor Unit 202
4.2 Removal and Assembly of Indoor Unit 209
5 EXPLODED VIEWS AND PART LIST 232
5.1 Exploded Views and Parts List of Outdoor Unit 232
5.2 Exploded Views and Parts List of Indoor Unit 235

PRODUCT

PRODUCT

1 MODELS LIST

1.1 Outdoor Unit

Units Series	Model	Capacity		Ref.	Power Supply	Appearance
		Cooling (Btu/h)	Heating (Btu/h)			
DC Inverter Multi VRF	GMV(L)-Pd100W/NaB-K	34120	37532	R410A	220-240V ~50Hz	
	GMV(L)-Pd120W/NaB-K	40944	47768	R410A	220-240V ~50Hz	
	GMV(L)-Pd140W/NaB-K	47768	52545	R410A	220-240V ~50Hz	
	GMV(L)-Pd160W/NaB-K	54592	60051	R410A	220-240V ~50Hz	

Note:1Ton =12000Btu/h = 3.517kW

Notes: a. Cooling only unit (GMVL type) has no items on heating;
b. Noise was tested in semi-silenced room, so the actual noise value will be a little higher for change of ambient;
c. The charge amount of R410A in the list is only the sealed amount when outdoor unit outgoing. When installing, calculate the additional charge amount according to actual length of pipe and the matched indoor units;
d. Nominal capacities are based on the following conditions:

Cooling	Heating
Indoor :27℃(80.6℉)/19℃(66.2℉) Outdoor: 35℃(95℉)/-	Indoor: 20℃(68℉)/- Outdoor : 7℃(44.6℉)/6℃(42.8℉);

1.2 Indoor Unit

1.2.1 Duct type

Model	Capacity		Ref	Power Supply	Appearance
	Cooling (Btu/h)	Heating (Btu/h)			
GMV-R22P/Na-K	7507	8530	R410A	220-240V ~50Hz	
GMVL-R22P/Na-K		/			
GMV-R25P/Na-K	8530	10236			
GMVL-R25P/Na-K		/			
GMV-R28P/Na-K	9554	10918			
GMVL-R28P/Na-K		/			
GMV-R32P/Na-K	10919	12283			
GMVL-R32P/Na-K		/			
GMV-R36P/Na-K	12284	13648			
GMVL-R36P/Na-K		/			
GMV-R40P/Na-K	13649	15354			
GMVL-R40P/Na-K		/			
GMV-R45P/Na-K	15355	17060			
GMVL-R45P/Na-K		/			
GMV-R50P/Na-K	17061	19790			
GMVL-R50P/Na-K		/			
GMV-R56P/Na-K	19108	21496			
GMVL-R56P/Na-K		/			
GMV-R63P/Na-K	21496	23884			
GMVL-R63P/Na-K		/			
GMV-R71P/Na-K	24226	27296			
GMVL-R71P/Na-K		/			
GMV-R80P/Na-K	27297	30026			
GMVL-R80P/Na-K		/			
GMV-R90P/Na-K	30709	34120			
GMVL-R90P/Na-K		/			
GMV-R100P/Na-K	34121	37532			
GMVL-R100P/Na-K		/			
GMV-R112P/Na-K	38216	42650			
GMVL-R112P/Na-K		/			
GMV-R125P/Na-K	42652	46060			
GMVL-R125P/Na-K		/			
GMV-R140P/Na-K	47770	51180			
GMVL-R140P/Na-K		/			

Conversion Formula: Btu/h=kW×3412

Model	Capacity		Ref	Power Supply	Appearance
	Cooling (Btu/h)	Heating (Btu/h)			
GMV-R22P/NaB-K	7507	8530	R410A	220-240V ~50Hz	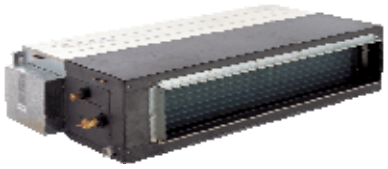
GMVL-R22P/NaB-K		/			
GMV-R28P/NaB-K	9554	10918			
GMVL-R28P/NaB-K		/			
GMV-R36P/NaB-K	12284	13648			
GMVL-R36P/NaB-K		/			
GMV-R45P/NaB-K	15355	17060			
GMVL-R45P/NaB-K		/			
GMV-R56P/NaB-K	19108	21496			
GMVL-R56P/NaB-K		/			
GMV-R71P/NaB-K	24226	27296			
GMVL-R71P/NaB-K		/			
GMV-R90P/NaB-K	30709	34120			
GMVL-R90P/NaB-K		/			
GMV-R112P/NaB-K	38216	42650			
GMVL-R112P/NaB-K		/			
GMV-R140P/NaB-K	47770	51180			
GMVL-R140P/NaB-K		/			
GMV-R22PS/NaB-K	7507	8530	R410A	220-240V ~50Hz	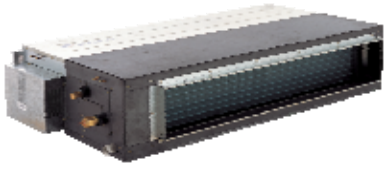
GMVL-R22PS/NaB-K		/			
GMV-R28PS/NaB-K	9554	10918			
GMVL-R28PS/NaB-K		/			
GMV-R36PS/NaB-K	12284	13648			
GMVL-R36PS/NaB-K		/			
GMV-R45PS/NaB-K	15355	17060			
GMVL-R45PS/NaB-K		/			
GMV-R56PS/NaB-K	19108	21496			
GMVL-R56PS/NaB-K		/			
GMV-R71PS/NaB-K	24226	27296			
GMVL-R71PS/NaB-K		/			
GMV-R90PS/NaB-K	30709	34120			
GMVL-R90PS/NaB-K		/			
GMV-R112PS/NaB-K	38216	42650			
GMVL-R112PS/NaB-K		/			
GMV-R140PS/NaB-K	47770	51180			
GMVL-R140PS/NaB-K		/			

Conversion Formula: Btu/h=kW×3412

1.2.2 Cassette type

Model	Capacity		Ref	Power Supply	Appearance
	Cooling (Btu/h)	Heating (Btu/h)			
GMV-R22T/NaA-K	7506	8530	R410A	220-240V ~50Hz	
GMVL-R22T/NaA-K		/			
GMV-R28T/NaA-K	9550	10900			
GMVL-R28T/NaA-K		/			
GMV-R36T/NaA-K	12280	13650			
GMVL-R36T/NaA-K		/			
GMV-R45T/NaA-K	15360	17060			
GMVL-R45T/NaA-K		/			
GMV-R28T/Na-K	9550	10900			
GMVL-R28T/Na-K		/			
GMV-R36T/Na-K	12280	13650			
GMVL-R36T/Na-K		/			
GMV-R45T/Na-K	15360	17060			
GMVL-R45T/Na-K		/			
GMV-R50T/Na-K	17060	19790			
GMVL-R50T/Na-K		/			
GMV-R56T/Na-K	19100	21500			
GMVL-R56T/Na-K		/			
GMV-R63T/Na-K	21500	23880			
GMVL-R63T/Na-K		/			
GMV-R71T/Na-K	24230	27300			
GMVL-R71T/Na-K		/			
GMV-R80T/Na-K	27300	30030			
GMVL-R80T/Na-K		/			
GMV-R90T/Na-K	30700	34120			
GMVL-R90T/Na-K		/			
GMV-R100T/Na-K	34121	37532			
GMVL-R100T/Na-K		/			
GMV-R112T/Na-K	38210	42650			
GMVL-R112T/Na-K		/			
GMV-R125T/Na-K	42650	46062			

GMVL-R125T/Na-K		/			
GMV-R140T/Na-K	47770	49470			
GMVL-R140T/Na-K		/			
GMV-R22Td/Na-K	7506	8530	R410A	220-240V ~50Hz	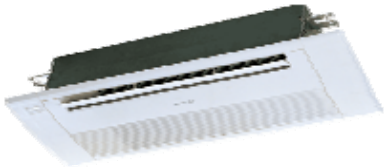
GMVL-R22Td/Na-K		/			
GMV-R28Td/Na-K	9550	10900			
GMVL-R28Td/Na-K		/			
GMV-R36Td/Na-K	12280	13650			
GMVL-R36Td/Na-K		/			

Conversion Formula: Btu/h=kW×3412

1.2.3 Wall mounted type

Model	Capacity		Ref	Power Supply	Appearance
	Cooling (Btu/h)	Heating (Btu/h)			
GMV-R22G/NaB-K	7507	8530	R410A	220-240V ~50Hz	
GMVL-R22G/NaB-K		/			
GMV-R28G/NaB-K	9554	10919			
GMVL-R28G/NaB-K		/			
GMV-R36G/NaB-K	12284	13649			
GMVL-R36G/NaB-K		/			
GMV-R45G/NaB-K	15355	17061			
GMVL-R45G/NaB-K		/			
GMV-R50G/NaB-K	17061	19790			
GMVL-R50G/NaB-K		/			
GMV-R56G/NaB-K	19108	21496			
GMVL-R56G/NaB-K		/			
GMV-R22G/NaC-K	7507	8530			
GMVL-R22G/NaC-K		/			
GMV-R28G/NaC-K	9554	10919			
GMVL-R28G/NaC-K		/			
GMV-R36G/NaC-K	12284	13649			
GMVL-R36G/NaC-K		/			
GMV-R45G/NaC-K	15355	17061			
GMVL-R45G/NaC-K		/			
GMV-R71G/Na-K	24226	27297			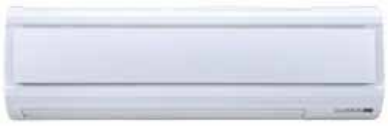
GMVL-R71G/Na-K		/			
GMV-R80G/Na-K	27297	30709			
GMVL-R80G/Na-K		/			

Conversion Formula: Btu/h=kW×3412

1.2.4Floor ceiling type

Model	Capacity		Ref	Power Supply	Appearance
	Cooling (Btu/h)	Heating (Btu/h)			
GMV-R28Zd/Na-K	9554	10919	R410A	220-240V ~50Hz	
GMVL-R28Zd/Na-K		/			
GMV-R36Zd/Na-K	12284	13649			
GMVL-R36Zd/Na-K		/			
GMV-R50Zd/Na-K	17061	19790			
GMVL-R50Zd/Na-K		/			
GMV-R71Zd/Na-K	24226	27297			
GMVL-R71Zd/Na-K		/			
GMV-R90Zd/Na-K	30709	34121			
GMVL-R90Zd/Na-K		/			
GMV-R112Zd/Na-K	38216	42652			
GMVL-R112Zd/Na-K		/			
GMV-R125Zd/Na-K	42652	46064			
GMVL-R125Zd/Na-K		/			

Conversion Formula: Btu/h=kW×3412

Notes: a. Cooling only unit (GMVL type) has no items on heating;
b. Noise was tested in semi-silenced room, so the actual noise value will be a little higher for change of ambient;
c. Nominal capacities are based on the following conditions:

Cooling	Heating
Indoor :27℃(80.6℉)/19℃(66.2℉)	Indoor: 20℃(68℉)/-
Outdoor: 35℃(95℉)/-	Outdoor : 7℃(44.6℉)/6℃(42.8℉)

2 NOMENCLATURE

2.1 Nomenclature of outdoor unit

GMV	□	L	-	Pd	120	W	/	Na	B	-	K
1	2	3		4	5	6		7	8		9

NO.	Description	Options
1	Code for type	GMV=Gree Multi Variable
2	Code for weather	Default:T1 T2:T2 weather T3:T3 weather
3	Code for model	L: Cooling Only Default: Heat pump
4	Units Series	Pd: DC inverter VRF
5	Nominal cooling capacity	120 represents 12kW Btu/h=kW×3412
6		W: outdoor unit
7	Refrigerant	Na: R410A
8	Series number	B: The second generation
9	Power supply	K: 220-240V 50Hz

2.2 Nomenclature of indoor unit

GMV	□	L	—	R	36	P	/	Na	B	□
1	2	3		4	5	6		7	8	9

NO.	Description	Options
1	Code for type	GMV=Gree Multi Variable
2	Code for weather	Default:T1 T2:T2 weather T3:T3 weather
3	Code for model	L: Cooling Only Default: Heat pump
4	Code for function	R: R-R series
5	Nominal cooling capacity	36 represents 3.6kW Btu/h=kW×3412
6	Code for unit type	P=Duct type T=Cassette type Td=1-way Casstte type G=Wall mounted Zd=Floor ceiling
7	Refrigerant	Na: R410A
8	Series number	B: The second generation
9	Power supply	K: 220-240V 50Hz

Example: GMV-R22G/NaB-K. A wall mounted indoor unit of GREE, and the nominal cooling capacity is 2.2kw. It's the second generation product, and it could connect the outdoor unit with digital scroll, the power supply is 220V-240V, 50Hz.

3 FUNCTION

For Comfortable Air Conditioning	Auto Restart
	Fan Operation Mode
	LCD Remote Controller (Option)
	Auto Swing Function
	Ceiling Soiling Prevention
	Program Dry
	High Fan Speed Mode
	High Ceiling Application
	Two Select Thermo Sensor
	Hot Start
	Timer Selector
For Easy Construction and Maintenance	Fresh Return air inlet Directly from The Unit
	Drain Pump
	Long Life Filter
	Ultra-Long life Filter (Option)
	Mold Resistant Treatment for Filter
	Filter Sign
	Mold Resistant Drain Pan
	Emergency Operation
	Self Diagnoses Function
For Flexible Control	Set Back Time Clock
	Double Remote Control
	Group Control By 1 Remote Controller
	Control By External Command
	Remote/Centralized Control

4 PRODUCT DATA

4.1 Product data of outdoor

Model			GMV(L)-Pd100W/NaB-K	GMV(L)-Pd120W/NaB-K
Capacity	Cooling①	kW	10.0	12.0
		Btu/h	34120	40944
	Heating②	kW	11.0	14.0
		Btu/h	37532	47768
Sound Pressure Level		dB(A)	58	58
R410A Filling Amount		kg	7.5	7.5
Power Supply		V,Ph,Hz	220V-240V~,1Ph,50Hz	220V-240V~,1Ph,50Hz
Power input	Cooling	kW	2.86	3.5
	Heating	kW	2.6	3.4
Rated current	Cooling	A	14.2	17.3
	Heating	A	13.2	16.4
Compressor			DC inverter dual-rotor type compressor×1	
Moisture protection			IP×4	IP×4
Climate Type			T1	T1
Connection Pipes	Gas Pipe	mm	ϕ15.9	ϕ15.9
		Inch	5/8 "	5/8 "
	Liquid Pipe	mm	ϕ9.52	ϕ9.52
		Inch	3/8 "	3/8 "
	Connection Method		Flare Connection	Flare Connection
	Max. NO. of Indoor Unit		5	6
Fan	Power input	kW	0.136	0.136
	Air Flow Rate	m^3/h	6000	6000
		CFM	3538	3538
	Step		3	3
Recommended Power Lines	mm^2×Number		6.0×3	6.0×3
Circuit breaker		A	32	32
Dimensions of Installation		mm	1650×590×1700	1650×590×1700
Unit Dimensions	Width	mm	950	950
	Depth	mm	340	340
	Height	mm	1250	1250
Dimensions of Package	Width	mm	1110	1110
	Depth	mm	450	450
	Height	mm	1280	1280
Weight(Net/Gross)		kg	135/140	135/140

Model	GMV(L)-Pd140W/NaB-K	GMV(L)-Pd160W/NaB-K

Capacity	Cooling①	kW	14.0	16.0
		Btu/h	47768	54592
	Heating②	kW	15.4	17.6
		Btu/h	52545	60051
Sound Pressure Level		dB(A)	58	60
R410A Filling Amount		kg	7.5	7.5
Power Supply		V,Ph,Hz	220V-240V~,1Ph,50Hz	220V-240V~,1Ph,50Hz
Power input	Cooling	kW	4.36	4.98
	Heating	kW	4.05	4.85
Rated current	Cooling	A	20.5	23.2
	Heating	A	19.6	21.9
Compressor			DC inverter dual-rotor type compressor×1	
Moisture protection			IP×4	IP×4
Climate Type			T1	T1
Connection Pipes	Gas Pipe	mm	ϕ15.9	ϕ19.05
		Inch	5/8 "	3/4 "
	Liquid Pipe	mm	ϕ9.52	ϕ9.52
		Inch	3/8 "	3/8 "
	Connection Method		Flare Connection	Flare Connection
	Max. NO. of Indoor Unit		7	8
Fan	Power input	kW	0.136	0.184
	Air Flow Rate	m^3/h	6000	6800
		CFM	3538	4010
	Step		3	3
Recommended Power Lines		mm^2×Number	10.0×3	10.0×3
Circuit breaker		A	40	40
Dimensions of Installation		mm	1650×590×1700	1650×590×1700
Unit Dimensions	Width	mm	950	950
	Depth	mm	340	340
	Height	mm	1250	1250
Dimensions of Package	Width	mm	1110	1110
	Depth	mm	450	450
	Height	mm	1280	1280
Weight(Net/Gross)		kg	135/140	135/140

Notes:

① Refer to the product nameplate for parameters and specification of the unit;

② The model with GMVL code is cooling only unit; while the model with GMV code is heat pump unit; the cooling only units dose not have any parameters of performing heating;

③ The sound level was tested under circumstance of semi-anechoic chamber; the value of noise could be a little higher in actual operation.

4.2 Product data of indoor

4.2.1 Duct Type

Model			GMV(L)-R22P/Na-K	GMV(L)-R25P/Na-K	GMV(L)-R28P/Na-K
Cooling Capacity		kW	2.2	2.5	2.8
		Btu	7506	8530	9554
Heating Capacity		kW	2.5	3.0	3.2
		Btu	8530	10236	10918
Air Flow Rate		m3/h	450	450	570
		CFM	265	265	336
Sound Pressure Level (H/L)		dB(A)	37/33	37/33	39/35
External Static Pressure		Pa	25	25	25
Power Supply			220-240V～50Hz	220-240V～50Hz	220-240V～50Hz
Fan Motor	Output	kW	0.02	0.02	0.02
	Running Current	A	0.17	0.17	0.16
Connecting Pipes	Gas Pipe	mm	ϕ9.52	ϕ9.52	ϕ9.52
		inch	3/8 "	3/8 "	3/8 "
	Liquid Pipe	mm	ϕ6.35	ϕ6.35	ϕ6.35
		inch	1/4 "	1/4 "	1/4 "
	Connection Method		Flare Connection	Flare Connection	Flare Connection
Drain Pipes (External Dia. × Thickness)		mm	ϕ20×1.5	ϕ20×1.5	ϕ20×1.5
Unit Dimensions (W×D×H)		mm	875×680×220	875×680×220	875×680×220
Package Dimensions (W×D×H)		mm	1012×708×275	1012×708×275	1012×708×275
Weight（Net/Gross）		kg	27/31	27/31	27/31

Notes:

① Refer to the product nameplate for parameters and specification of the unit;

② The model with GMVL code is cooling only unit; while the model with GMV code is heat pump unit; the cooling only units dose not have any parameters of performing heating;

③ The sound level was tested under circumstance of semi-anechoic chamber; the value of noise could be a little higher in actual operation.

Model			GMV(L)-R32P/Na-K	GMV(L)-R36P/Na-K	GMV(L)-R40P/Na-K
Cooling Capacity		kW	3.2	3.6	4.0
		Btu	10919	12284	13649
Heating Capacity		kW	3.6	4.0	4.5
		Btu	12283	13648	15354
Air Flow Rate		m3/h	570	570	840
		CFM	336	336	494
Sound Pressure Level (H/L)		dB(A)	39/35	39/35	40/36
External Static Pressure		Pa	25	25	20
Power Supply			220-240V～50Hz	220-240V～50Hz	220-240V～50Hz
Fan Motor	Output	kW	0.02	0.02	0.07
	Running Current	A	0.16	0.16	0.69
Connecting Pipes	Gas Pipe	mm	ϕ12.7	ϕ12.7	ϕ12.7
		inch	1/2 "	1/2 "	1/2 "
	Liquid Pipe	mm	ϕ6.35	ϕ6.35	ϕ6.35
		inch	1/4 "	1/4 "	1/4 "
	Connection Method		Flare Connection	Flare Connection	Flare Connection
Drain Pipes (External Dia. × Thickness)		mm	ϕ20×1.5	ϕ20×1.5	ϕ30×1.5
Unit Dimensions (W×D×H)		mm	875×680×220	875×680×220	980×736×266
Package Dimensions (W×D×H)		mm	1012×708×275	1012×708×275	1068×766×320
Weight（Net/Gross）		kg	27/31	27/31	36/39

Notes:

① Refer to the product nameplate for parameters and specification of the unit;

② The model with GMVL code is cooling only unit; while the model with GMV code is heat pump unit; the cooling only units dose not have any parameters of performing heating;

③ The sound level was tested under circumstance of semi-anechoic chamber; the value of noise could be a little higher in actual operation.

Model			GMV(L)-R45P/Na-K	GMV(L)-R50P/Na-K	GMV(L)-R56P/Na-K
Cooling Capacity		kW	4.5	5.0	5.6
		Btu	15355	17061	19108
Heating Capacity		kW	5.0	5.8	6.3
		Btu	17060	19790	21496
Air Flow Rate		m3/h	840	840	1400
		CFM	494	494	824
Sound Pressure Level (H/L)		dB(A)	40/36	40/36	42/38
External Static Pressure		Pa	40	40	100
Power Supply			220-240V～50Hz	220-240V～50Hz	220-240V～50Hz
Fan Motor	Output	kW	0.07	0.07	0.15
	Running Current	A	0.69	0.69	1.32
Connecting Pipes	Gas Pipe	mm	ф12.7	ф12.7	ф15.9
		inch	1/2 "	1/2 "	5/8 "
	Liquid Pipe	mm	ф6.35	ф6.35	ф9.52
		inch	1/4 "	1/4 "	3/8 "
	Connection Method		Flare Connection	Flare Connection	Flare Connection
Drain Pipes (External Dia. × Thickness)		mm	ф30×1.5	ф30×1.5	ф30×1.5
Unit Dimensions (W×D×H)		mm	980×736×266	980×736×266	1112×756×300
Package Dimensions (W×D×H)		mm	1068×766×320	1068×766×320	1245×785×360
Weight（Net/Gross）		kg	36/39	36/39	55/59

Notes:
① Refer to the product nameplate for parameters and specification of the unit;
② The model with GMVL code is cooling only unit; while the model with GMV code is heat pump unit; the cooling only units dose not have any parameters of performing heating;
③ The sound level was tested under circumstance of semi-anechoic chamber; the value of noise could be a little higher in actual operation.

Model			GMV(L)-R63P/Na-K	GMV(L)-R71P/Na-K	GMV(L)-R80P/Na-K
Cooling Capacity		kW	6.3	7.1	8.0
		Btu	21496	24226	27297
Heating Capacity		kW	7.0	8.0	8.8
		Btu	23884	27296	30026
Air Flow Rate		m3/h	1400	1400	1400
		CFM	824	824	824
Sound Pressure Level (H/L)		dB(A)	42/38	42/38	42/38
External Static Pressure		Pa	100	100	100
Power Supply			220-240V～50Hz	220-240V～50Hz	220-240V～50Hz
Fan Motor	Output	kW	0.15	0.15	0.15
	Running Current	A	1.32	1.32	1.32
Connecting Pipes	Gas Pipe	mm	ф15.9	ф15.9	ф15.9
		inch	5/8 "	5/8 "	5/8 "
	Liquid Pipe	mm	ф9.52	ф9.52	ф9.52
		inch	3/8 "	3/8 "	3/8 "
	Connection Method		Flare Connection	Flare Connection	Flare Connection
Drain Pipes (External Dia. × Thickness)		mm	ф30×1.5	ф30×1.5	ф30×1.5
Unit Dimensions (W×D×H)		mm	1112×756×300	1112×756×300	1112×756×300
Package Dimensions (W×D×H)		mm	1245×785×360	1245×785×360	1245×785×360
Weight（Net/Gross）		kg	55/59	55/59	55/59

Notes:

① Refer to the product nameplate for parameters and specification of the unit;

② The model with GMVL code is cooling only unit; while the model with GMV code is heat pump unit; the cooling only units dose not have any parameters of performing heating;

③ The sound level was tested under circumstance of semi-anechoic chamber; the value of noise could be a little higher in actual operation.

Model			GMV(L)-R90P/Na-K	GMV(L)-R100P/Na-K	GMV(L)-R112P/Na-K
Cooling Capacity		kW	9.0	10.0	11.2
		Btu	30709	34121	38216
Heating Capacity		kW	10.0	11.0	12.5
		Btu	34120	37532	42650
Air Flow Rate		m3/h	2000	2000	2000
		CFM	1177	1177	1177
Sound Pressure Level (H/L)		dB(A)	44/40	44/40	44/40
External Static Pressure		Pa	100	100	100
Power Supply			220-240V～50Hz	220-240V～50Hz	220-240V～50Hz
Fan Motor	Output	kW	0.225	0.225	0.225
	Running Current	A	2.14	2.14	2.14
Connecting Pipes	Gas Pipe	mm	ϕ15.9	ϕ15.9	ϕ15.9
		inch	5/8 "	5/8 "	5/8 "
	Liquid Pipe	mm	ϕ9.52	ϕ9.52	ϕ9.52
		inch	3/8 "	3/8 "	3/8 "
	Connection Method		Flare Connection	Flare Connection	Flare Connection
Drain Pipes（External Dia. × Thickness）		mm	ϕ30×1.5	ϕ30×1.5	ϕ30×1.5
Unit Dimensions (W×D×H)		mm	1385×736×300	1385×736×300	1385×736×300
Package Dimensions (W×D×H)		mm	1514×795×360	1514×795×360	1514×795×360
Weight（Net/Gross）		kg	75/79	75/79	75/79

Notes:

① Refer to the product nameplate for parameters and specification of the unit;

② The model with GMVL code is cooling only unit; while the model with GMV code is heat pump unit; the cooling only units dose not have any parameters of performing heating;

③ The sound level was tested under circumstance of semi-anechoic chamber; the value of noise could be a little higher in actual operation.

Model			GMV(L)-R125P/Na-K	GMV(L)-R140P/Na-K
Cooling Capacity		kW	12.5	14.0
		Btu	42652	47770
Heating Capacity		kW	13.5	15.0
		Btu	46060	51180
Air Flow Rate		m3/h	2000	2000
		CFM	1177	1177
Sound Pressure Level (H/L)		dB(A)	44/40	45/41
External Static Pressure		Pa	100	50
Power Supply			220-240V～50Hz	220-240V～50Hz
Fan Motor	Output	kW	0.225	0.225
	Running Current	A	2.14	2.14
Connecting Pipes	Gas Pipe	mm	ϕ15.9	ϕ15.9
		inch	5/8 "	5/8 "
	Liquid Pipe	mm	ϕ9.52	ϕ9.52
		inch	3/8 "	3/8 "
	Connection Method		Flare Connection	Flare Connection
Drain Pipes (External Dia. × Thickness)		mm	ϕ30×1.5	ϕ30×1.5
Unit Dimensions (W×D×H)		mm	1385×736×300	1385×736×300
Package Dimensions (W×D×H)		mm	1514×795×360	1514×795×360
Weight（Net/Gross）		kg	75/79	75/79

Notes:

① Refer to the product nameplate for parameters and specification of the unit;

② The model with GMVL code is cooling only unit; while the model with GMV code is heat pump unit; the cooling only units dose not have any parameters of performing heating;

③ The sound level was tested under circumstance of semi-anechoic chamber; the value of noise could be a little higher in actual operation

Model			GMV(L)-R22P/NaB-K	GMV(L)-R28P/NaB-K	GMV(L)-R36P/NaB-K
Cooling Capacity		kW	2.2	2.8	3.6
		Btu	7507	9554	12284
Heating Capacity		kW	2.5	3.2	4.0
		Btu	8530	10918	13648
Air Flow Rate		m3/h	450	570	570
		CFM	265	335	336
Sound Pressure Level (H/L)		dB(A)	37/33	39/35	39/35
External Static Pressure		Pa	50/20	50/20	50/20
Power Supply			220-240V～50Hz	220-240V～50Hz	220-240V～50Hz
Fan Motor	Output	kW	0.04	0.06	0.06
	Running Current	A	028	0.41	0.41
Connecting Pipes	Gas Pipe	mm	ϕ9.52	ϕ9.52	ϕ12.7
		inch	3/8 "	3/8 "	1/2 "
	Liquid Pipe	mm	ϕ6.35	ϕ6.35	ϕ6.35
		inch	1/4 "	1/4 "	1/4 "
	Connection Method		Flare Connection	Flare Connection	Flare Connection
Drain Pipes (External Dia. × Thickness)		mm	ϕ20×1.5	ϕ20×1.5	ϕ20×1.5
Unit Dimensions (W×D×H)		mm	880×655×250	880×655×250	880×655×250
Package Dimensions (W×D×H)		mm	1020×745×305	1020×745×305	1020×745×305
Weight（Net/Gross）		kg	27/31	28.5/33.5	28.5/33.5

Notes:

① Refer to the product nameplate for parameters and specification of the unit;

② The model with GMVL code is cooling only unit; while the model with GMV code is heat pump unit; the cooling only units dose not have any parameters of performing heating;

③ The sound level is tested under circumstance of semi-anechoic chamber; the value of noise could be a little higher in actual operation.

Model			GMV(L)-R45P/NaB-K	GMV(L)-R56P/NaB-K	GMV(L)-R71P/NaB-K
Cooling Capacity		kW	4.5	5.6	7.1
		Btu	15355	19108	24226
Heating Capacity		kW	5.0	6.3	8.0
		Btu	17060	21496	27296
Air Flow Rate		m3/h	700	1000	1100
		CFM	412	589	647
Sound Pressure Level (H/L)		dB(A)	40/36	44/40	45/41
External Static Pressure		Pa	50/20	60/30	60/30
Power Supply			220-240V～50Hz	220-240V～50Hz	220-240V～50Hz
Fan Motor	Output	kW	0.07	0.15	0.15
	Running Current	A	0.55	1.3	1.3
Connecting Pipes	Gas Pipe	mm	ϕ12.7	Φ15.9	Φ15.9
		inch	1/2 "	5/8 "	5/8 "
	Liquid Pipe	mm	ϕ6.35	Φ9.52	Φ9.52
		inch	1/4 "	3/8 "	3/8 "
	Connection Method		Flare Connection	Flare Connection	Flare Connection
Drain Pipes (External Dia. × Thickness)		mm	Φ30×1.5	Φ30×1.5	Φ30×1.5
Unit Dimensions (W×D×H)		mm	980×721×266	1155×756×300	1155×756×300
Package Dimensions (W×D×H)		mm	1068×766×320	1245×785×360	1245×785×360
Weight（Net/Gross）		kg	34/37	49/56	49/56

Notes:

① Refer to the product nameplate for parameters and specification of the unit;

② The model with GMVL code is cooling only unit; while the model with GMV code is heat pump unit; the cooling only units dose not have any parameters of performing heating;

③ The sound level is tested under circumstance of semi-anechoic chamber; the value of noise could be a little higher in actual operation.

Model			GMV(L)-R90P/NaB-K	GMV(L)-R112P/NaB-K	GMV(L)-R140P/NaB-K
Cooling Capacity		kW	9.0	11.2	14.0
		Btu	30709	38216	47770
Heating Capacity		kW	10.0	12.5	15.0
		Btu	34120	42650	51180
Air Flow Rate		m3/h	1700	1700	2000
		CFM	1001	1177	1177
Sound Pressure Level (H/L)		dB(A)	48/44	48/44	50/46
External Static Pressure		Pa	80/40	80/40	100/50
Power Supply			220-240V～50Hz	220-240V～50Hz	220-240V～50Hz
Fan Motor	Output	kW	0.225	0.225	0.26
	Running Current	A	2.15	2.15	2.67
Connecting Pipes	Gas Pipe	mm	Φ15.9	Φ15.9	Φ15.9
		inch	5/8 "	5/8 "	5/8 "
	Liquid Pipe	mm	Φ9.52	Φ9.52	Φ9.52
		inch	3/8 "	3/8 "	3/8 "
	Connection Method		Flare Connection	Flare Connection	Flare Connection
Drain Pipes (External Dia. × Thickness)		mm	Φ30×1.5	Φ30×1.5	Φ30×1.5
Unit Dimensions (W×D×H)		mm	1425×736×300	1425×736×300	1425×736×300
Package Dimensions (W×D×H)		mm	1514×785×360	1514×785×360	1514×785×360
Weight（Net/Gross）		kg	62/71	62/71	63.5/73

Notes:
① Refer to the product nameplate for parameters and specification of the unit;
② The model with GMVL code is cooling only unit; while the model with GMV code is heat pump unit; the cooling only units dose not have any parameters of performing heating;
③ The sound level is tested under circumstance of semi-anechoic chamber; the value of noise could be a little higher in actual operation.

Model			GMV(L)-R22PS/NaB-K	GMV(L)-R28PS/NaB-K	GMV(L)-R36PS/NaB-K
Cooling Capacity		kW	2.2	2.8	3.6
		Btu	7507	9554	12284
Heating Capacity		kW	2.5	3.2	4.0
		Btu	8530	10918	13648
Air Flow Rate		m3/h	450	570	570
		CFM	265	335	336
Sound Pressure Level (H/L)		dB(A)	37/33	39/35	39/35
External Static Pressure		Pa	50/20	50/20	50/20
Power Supply			220-240V～50Hz	220-240V～50Hz	220-240V～50Hz
Fan Motor	Output	kW	0.04	0.06	0.06
	Running Current	A	0.28	0.41	0.41
Connecting Pipes	Gas Pipe	mm	ϕ9.52	ϕ9.52	ϕ12.7
		inch	3/8 "	3/8 "	1/2 "
	Liquid Pipe	mm	ϕ6.35	ϕ6.35	ϕ6.35
		inch	1/4 "	1/4 "	1/4 "
	Connection Method		Flare Connection	Flare Connection	Flare Connection
Drain Pipes (External Dia. × Thickness)		mm	ϕ20×1.5	ϕ20×1.5	ϕ20×1.5
Unit Dimensions (W×D×H)		mm	880×655×250	880×655×250	880×655×250
Package Dimensions (W×D×H)		mm	1020×745×305	1020×745×305	1020×745×305
Weight（Net/Gross）		kg	28.5/33.5	30.5/35.5	30.5/35.5

Notes:

① Refer to the product nameplate for parameters and specification of the unit;

② The model with GMVL code is cooling only unit; while the model with GMV code is heat pump unit; the cooling only units dose not have any parameters of performing heating;

③ The sound level is tested under circumstance of semi-anechoic chamber; the value of noise could be a little higher in actual operation.

Model			GMV(L)-R45PS/NaB-K	GMV(L)-R56PS/NaB-K	GMV(L)-R71PS/NaB-K
Cooling Capacity		kW	4.5	5.6	7.1
		Btu	15355	19108	24226
Heating Capacity		kW	5.0	6.3	8.0
		Btu	17060	21496	27296
Air Flow Rate		m3/h	700	1000	1100
		CFM	412	589	647
Sound Pressure Level (H/L)		dB(A)	40/36	44/40	45/41
External Static Pressure		Pa	50/20	60/30	60/30
Power Supply			220-240V～50Hz	220-240V～50Hz	220-240V～50Hz
Fan Motor	Output	kW	0.07	0.15	0.15
	Running Current	A	0.55	1.3	1.3
Connecting Pipes	Gas Pipe	mm	ϕ12.7	Φ15.9	Φ15.9
		inch	1/2 "	5/8 "	5/8 "
	Liquid Pipe	mm	ϕ6.35	Φ9.52	Φ9.52
		inch	1/4 "	3/8 "	3/8 "
	Connection Method		Flare Connection	Flare Connection	Flare Connection
Drain Pipes (External Dia. × Thickness)		mm	Φ30×1.5	Φ30×1.5	Φ30×1.5
Unit Dimensions (W×D×H)		mm	980×721×266	1155×756×300	1155×756×300
Package Dimensions (W×D×H)		mm	1068×766×320	1245×785×360	1245×785×360
Weight（Net/Gross）		kg	36/39	51/58	51/58

Notes:

① Refer to the product nameplate for parameters and specification of the unit;

② The model with GMVL code is cooling only unit; while the model with GMV code is heat pump unit; the cooling only units dose not have any parameters of performing heating;

③ The sound level is tested under circumstance of semi-anechoic chamber; the value of noise could be a little higher in actual operation.

Model			GMV(L)-R90PS/NaB-K	GMV(L)-R112PS/NaB-K	GMV(L)-R140PS/NaB-K
Cooling Capacity		kW	9.0	11.2	14.0
		Btu	30709	38216	47770
Heating Capacity		kW	10.0	12.5	15.0
		Btu	34120	42650	51180
Air Flow Rate		m3/h	1700	1700	2000
		CFM	1001	1177	1177
Sound Pressure Level (H/L)		dB(A)	48/44	48/44	50/46
External Static Pressure		Pa	80/40	80/40	100/50
Power Supply			220-240V～50Hz	220-240V～50Hz	220-240V～50Hz
Fan Motor	Output	kW	0.225	0.225	0.26
	Running Current	A	2.15	2.15	2.67
Connecting Pipes	Gas Pipe	mm	Φ15.9	Φ15.9	Φ15.9
		inch	5/8 "	5/8 "	5/8 "
	Liquid Pipe	mm	Φ9.52	Φ9.52	Φ9.52
		inch	3/8 "	3/8 "	3/8 "
	Connection Method		Flare Connection	Flare Connection	Flare Connection
Drain Pipes (External Dia. × Thickness)		mm	Φ30×1.5	Φ30×1.5	Φ30×1.5
Unit Dimensions (W×D×H)		mm	1425×736×300	1425×736×300	1425×736×300
Package Dimensions (W×D×H)		mm	1514×785×360	1514×785×360	1514×785×360
Weight（Net/Gross）		kg	64/73	64/73	65.5/75

Notes:

① Refer to the product nameplate for parameters and specification of the unit;

② The model with GMVL code is cooling only unit; while the model with GMV code is heat pump unit; the cooling only units dose not have any parameters of performing heating;

③ The sound level is tested under circumstance of semi-anechoic chamber; the value of noise could be a little higher in actual operation.

4.2.2Cassete Type

Model			GMV (L)-R22T/NaA-K	GMV(L)-R28T/NaA-K	GMV(L)-R36T/NaA-K	GMV(L)-R45T/NaA-K
Cooling Capacity		kW	2.2	2.8	3.6	4.5
		Btu	7506	9554	12283	15354
Heating Capacity		kW	2.5	3.2	4.0	5.0
		Btu	8530	10918	13648	17060
Air Flow Rate		m3/h	600	600	600	600
		CFM	353	353	353	353
Sound Pressure Level (H/L)		dB(A)	47/41	47/41	47/41	47/41
Power Supply			220-240V~ 50Hz	220-240V~ 50Hz	220-240V~ 50Hz	220-240V~ 50Hz
Fan Motor	Output	kW	0.011	0.011	0.011	0.011
	Running Current	A	0.05	0.05	0.05	0.05
Connecting Pipes	Gas Pipe	mm	Φ9.52		Φ12.7	
		inch	3/8 "		1/2 "	
	Liquid Pipe	mm	Φ6.35		Φ6.35	
		inch	1/4 "		1/4 "	
	Connection Method		Flare Connection		Flare Connection	
Drain Pipes (External Dia. × Thickness)		mm	Φ30×1.5			
Unit Dimensions (W×D×H)		mm	Main body：570×570×230		Panel：650×650×50	
Package Dimensions (W×D×H)		mm	Main body：848×728×310		Panel：730×670×102	
Net Weight (Main body/Panel)		kg	20/5			
Gross Weight (Main body/Panel)		kg	27/10			

Notes:

① Refer to the product nameplate for parameters and specification of the unit;

② The model with GMVL code is cooling only unit; while the model with GMV code is heat pump unit; the cooling only units dose not have any parameters of performing heating;

③ The sound level was tested under circumstance of semi-anechoic chamber; the value of noise could be a little higher in actual operation.

Model			GMV(L)-R28T/Na-K	GMV(L)-R36T/Na-K	GMV(L)-R45T/Na-K
Cooling Capacity		kW	2.8	3.6	4.5
		Btu	9550	12280	15360
Heating Capacity		kW	3.2	4.0	5.0
		Btu	10900	13650	17060
Air Flow Rate		m3/h	680	680	680
		CFM	400	400	400
Sound Pressure Level (H/L)		dB(A)	37/34	37/34	37/34
External Static Pressure		Pa	0	0	0
Power Supply			220-240V～50Hz	220-240V～50Hz	220-240V～50Hz
Fan Motor	Output	kW	0.035	0.035	0.035
	Running Current	A	0.27	0.27	0.28
Connecting Pipes	Gas Pipe	mm	Φ9.52	Φ12.7	Φ12.7
		inch	3/8 "	1/2 "	1/2 "
	Liquid Pipe	mm	Φ6.35	Φ6.35	Φ6.35
		inch	1/4 "	1/4 "	1/4 "
	Connection Method		Flare Connection	Flare Connection	Flare Connection
Drain Pipes (External Dia. × Thickness)		mm	Φ30×1.5	Φ30×1.5	Φ30×1.5
Unit Dimensions (W×D×H)		mm	Main body：840×840×190 Panel：950×950×60		
Package Dimensions (W×D×H)		mm	Main body：960×960×257 Panel：1040×1025×115		
Net Weight (Main body/Panel)		kg	25/6.5		
Gross Weight (Main body/Panel)		kg	33/10		

Notes:

① Refer to the product nameplate for parameters and specification of the unit;

② The model with GMVL code is cooling only unit; while the model with GMV code is heat pump unit; the cooling only units dose not have any parameters of performing heating;

③ The sound level was tested under circumstance of semi-anechoic chamber; the value of noise could be a little higher in actual operation.

Model			GMV(L)-R50T/Na-K	GMV(L)-R56T/Na-K	GMV(L)-R63T/Na-K
Cooling Capacity		kW	5.0	5.6	6.3
		Btu	17060	19100	21500
Heating Capacity		kW	5.8	6.3	7.0
		Btu	19790	21500	23890
Air Flow Rate		m3/h	680	1180	1180
		CFM	400	695	695
Sound Pressure Level (H/L)		dB(A)	37/34	39/35	39/35
External Static Pressure		Pa	0	0	0
Power Supply			220-240V～50Hz	220-240V～50Hz	220-240V～50Hz
Fan Motor	Output	kW	0.035	0.035	0.035
	Running Current	A	0.28	0.37	0.37
Connecting Pipes	Gas Pipe	mm	Φ12.7	Φ15.9	Φ15.9
		inch	1/2 "	5/8 "	5/8 "
	Liquid Pipe	mm	Φ6.35	Φ9.52	Φ9.52
		inch	1/4 "	3/8 "	3/8 "
	Connection Method		Flare Connection	Flare Connection	Flare Connection
Drain Pipes (External Dia. × Thickness)		mm	Φ30×1.5	Φ30×1.5	Φ30×1.5
Unit Dimensions (W×D×H)		mm	Main body：840×840×190 Panel：950×950×60	Main body：840×840×240 Panel：950×950×60	
Package Dimensions (W×D×H)		mm	Main body：960×960×257 Panel：1040×1025×115	Main body：960×960×310 Panel：1040×1025×115	
Net Weight (Main body/Panel)		kg	25/6.5	30/6.5	
Gross Weight (Main body/Panel)		kg	33/10	38/10	

Notes:

① Refer to the product nameplate for parameters and specification of the unit;

② The model with GMVL code is cooling only unit; while the model with GMV code is heat pump unit; the cooling only units dose not have any parameters of performing heating;

③ The sound level was tested under circumstance of semi-anechoic chamber; the value of noise could be a little higher in actual operation.

Model			GMV(L)-R71T/Na-K	GMV(L)-R80T/Na-K	GMV(L)-R90T/Na-K
Cooling Capacity		kW	7.1	8.0	9.0
		Btu	24230	27300	30700
Heating Capacity		kW	8.0	8.8	10.0
		Btu	27300	30030	34120
Air Flow Rate		m3/h	1180	1180	1860
		CFM	695	695	1095
Sound Pressure Level (H/L)		dB(A)	39/35	39/35	40/36
External Static Pressure		Pa	0	0	0
Power Supply			220-240V～50Hz	220-240V～50Hz	220-240V～50Hz
Fan Motor	Output	kW	0.035	0.035	0.06
	Running Current	A	0.37	0.37	0.59
Connecting Pipes	Gas Pipe	mm	Φ15.9	Φ15.9	Φ15.9
		inch	5/8 "	5/8 "	5/8 "
	Liquid Pipe	mm	Φ9.52	Φ9.52	Φ9.52
		inch	3/8 "	3/8 "	3/8 "
	Connection Method		Flare Connection	Flare Connection	Flare Connection
Drain Pipes (External Dia. × Thickness)		mm	Φ30×1.5	Φ30×1.5	Φ30×1.5
Unit Dimensions (W×D×H)		mm	Main body：840×840×240 Panel：950×950×60		Main body：840×840×320 Panel：950×950×60
Package Dimensions (W×D×H)		mm	Main body：960×960×310 Panel：1040×1025×115		Main body：960×960×394 Panel：1040×1025×115
Net Weight (Main body/Panel)		kg	30/6.5		38/6.5
Gross Weight (Main body/Panel)		kg	38/10		46/10

Notes:

① Refer to the product nameplate for parameters and specification of the unit;

② The model with GMVL code is cooling only unit; while the model with GMV code is heat pump unit; the cooling only units dose not have any parameters of performing heating;

③ The sound level was tested under circumstance of semi-anechoic chamber; the value of noise could be a little higher in actual operation.

Model			GMV(L)-R100T/Na-K	GMV(L)-R112T/Na-K
Cooling Capacity		kW	10.0	11.2
		Btu	34120	38210
Heating Capacity		kW	11.0	12.5
		Btu	37540	42650
Air Flow Rate		m3/h	1860	1860
		CFM	1095	1095
Sound Pressure Level (H/L)		dB(A)	40/36	40/36
External Static Pressure		Pa	0	0
Power Supply			220-240V～50Hz	220-240V～50Hz
Fan Motor	Output	kW	0.06	0.06
	Running Current	A	0.59	0.59
Connecting Pipes	Gas Pipe	mm	Φ15.9	Φ15.9
		inch	5/8 "	5/8 "
	Liquid Pipe	mm	Φ9.52	Φ9.52
		inch	3/8 "	3/8 "
	Connection Method		Flare Connection	Flare Connection
Drain Pipes (External Dia. × Thickness)		mm	Φ30×1.5	Φ30×1.5
Unit Dimensions (W×D×H)		mm	Main body：840×840×320 Panel：950×950×60	
Package Dimensions (W×D×H)		mm	Main body：960×960×394 Panel：1040×1025×115	
Net Weight (Main body/Panel)		kg	38/6.5	
Gross Weight (Main body/Panel)		kg	46/10	

Notes:

① Refer to the product nameplate for parameters and specification of the unit;

② The model with GMVL code is cooling only unit; while the model with GMV code is heat pump unit; the cooling only units dose not have any parameters of performing heating;

③ The sound level was tested under circumstance of semi-anechoic chamber; the value of noise could be a little higher in actual operation.

Model			GMV(L)-R125T/Na-K	GMV(L)-R140T/Na-K
Cooling Capacity		kW	12.5	14.0
		Btu	42650	47770
Heating Capacity		kW	13.5	14.5
		Btu	46062	49470
Air Flow Rate		m3/h	1860	1860
		CFM	1095	1095
Sound Pressure Level (H/L)		dB(A)	40/36	40/36
External Static Pressure		Pa	0	0
Power Supply			220-240V～50Hz	220-240V～50Hz
Fan Motor	Output	kW	0.06	0.06
	Running Current	A	0.59	0.59
Connecting Pipes	Gas Pipe	mm	Φ15.9	Φ15.9
		inch	5/8 "	5/8 "
	Liquid Pipe	mm	Φ9.52	Φ9.52
		inch	3/8 "	3/8 "
	Connection Method		Flare Connection	Flare Connection
Drain Pipes (External Dia. × Thickness)		mm	Φ30×1.5	Φ30×1.5
Unit Dimensions (W×D×H)		mm	Main body：840×840×320 Panel：950×950×60	
Package Dimensions (W×D×H)		mm	Main body：960×960×394 Panel：1040×1025×115	
Net Weight (Main body/Panel)		kg	38/6.5	
Gross Weight (Main body/Panel)		kg	46/10	

Notes:

① Refer to the product nameplate for parameters and specification of the unit;

② The model with GMVL code is cooling only unit; while the model with GMV code is heat pump unit; the cooling only units dose not have any parameters of performing heating;

③ The sound level was tested under circumstance of semi-anechoic chamber; the value of noise could be a little higher in actual operation.

Model			GMV(L)-R22Td/Na-K	GMV(L)-R28Td/Na-K	GMV(L)-R36Td/Na-K
Cooling Capacity		kW	2.2	2.8	3.6
		Btu	7506	9550	12280
Heating Capacity		kW	2.5	3.2	4.0
		Btu	8530	10900	13650
Air Flow Rate		m3/h	450	500	500
		CFM	265	294	294
Sound Pressure Level (H/L)		dB(A)	45/41	45/41	45/41
External Static Pressure		Pa	0	0	0
Power Supply			220-240V～50Hz	220-240V～50Hz	220-240V～50Hz
Fan Motor	Output	kW	0.02	0.02	0.02
	Running Current	A	0.22	0.22	0.22
Connecting Pipes	Gas Pipe	mm	Φ9.52	Φ9.52	Φ12.7
		inch	3/8 "	3/8 "	1/2 "
	Liquid Pipe	mm	Φ6.35	Φ6.35	Φ6.35
		inch	1/4 "	1/4 "	1/4 "
	Connection Method		Flare Connection	Flare Connection	Flare Connection
Drain Pipes (External Dia. × Thickness)		mm	Φ30×1.5	Φ30×1.5	Φ30×1.5
Unit Dimensions (W×D×H)		mm	Main body：920×360×185 Panel：1180×430×30		
Package Dimensions (W×D×H)		mm	Main body：1290×465×270 Panel：1260×505×110		
Net Weight (Main body/Panel)		kg	16/3		
Gross Weight (Main body/Panel)		kg	25/5		

Notes:

① Refer to the product nameplate for parameters and specification of the unit;

② The model with GMVL code is cooling only unit; while the model with GMV code is heat pump unit; the cooling only units dose not have any parameters of performing heating;

③ The sound level was tested under circumstance of semi-anechoic chamber; the value of noise could be a little higher in actual operation

4.2.3 Wall mounted Type

Model			GMV(L)-R22G/NaB-K	GMV(L)-R28G/NaB-K	GMV(L)-R36G/NaB-K
Cooling Capacity		kW	2.2	2.8	3.6
		Btu	7507	9554	12284
Heating Capacity		kW	2.5	3.2	4.0
		Btu	8530	10919	13649
Air Flow Rate		m3/h	360	360	500
		CFM	212	212	294
Sound Pressure Level (H/L)		dB(A)	37/28	37/28	43/28
External Static Pressure		Pa	0	0	0
Power Supply			220-240V~50Hz	220-240V~50Hz	220-240V~50Hz
Fan Motor	Output	kW	0.014	0.014	0.022
	Running Current	A	0.15	0.15	0.22
Connecting Pipes	Gas Pipe	mm	Φ9.52	Φ9.52	Φ12.7
		inch	3/8 "	3/8 "	1/2 "
	Liquid Pipe	mm	Φ6.35	Φ6.35	Φ6.35
		inch	1/4 "	1/4 "	1/4 "
	Connection Method		Flare Connection	Flare Connection	Flare Connection
Drain Pipes (External Dia. ×Thickness)		mm	Φ20×1.5	Φ20×1.5	Φ20×1.5
Unit Dimensions (W×D×H)		mm	830×189×285	830×189×285	830×189×285
Package Dimensions (W×D×H)		mm	995×394×268	995×394×268	995×394×268
Weight（Net/Gross）		kg	8/14.3	8/14.3	11/15.8

Notes:

① Refer to the product nameplate for parameters and specification of the unit;

② The model with GMVL code is cooling only unit; while the model with GMV code is heat pump unit; the cooling only units dose not have any parameters of performing heating;

③ The sound level was tested under circumstance of semi-anechoic chamber; the value of noise could be a little higher in actual operation.

Model			GMV(L)-R45G/NaB-K	GMV(L)-R50G/NaB-K	GMV(L)-R56G/NaB-K
Cooling Capacity		kW	4.5	5.0	5.6
		Btu	15355	17061	19108
Heating Capacity		kW	5.0	5.8	6.3
		Btu	17061	19790	21496
Air Flow Rate		m3/h	500	700	750
		CFM	294	412	441
Sound Pressure Level (H/L)		dB(A)	43/28	45/40	45/40
External Static Pressure		Pa	0	0	0
Power Supply			220-240V~50Hz	220-240V~50Hz	220-240V~50Hz
Fan Motor	Output	kW	0.022	0.02	0.02
	Running Current	A	0.22	0.25	0.26
Connecting Pipes	Gas Pipe	mm	Φ12.7	Φ12.7	Φ15.9
		inch	1/2 "	1/2 "	5/8 "
	Liquid Pipe	mm	Φ6.35	Φ6.35	Φ9.52
		inch	1/4 "	1/4 "	3/8 "
	Connection Method		Flare Connection	Flare Connection	Flare Connection
Drain Pipes (External Dia. × Thickness)		mm	Φ20×1.5	Φ30×1.5	Φ30×1.5
Unit Dimensions (W×D×H)		mm	830×189×285	1020×228×310	1020×228×310
Package Dimensions (W×D×H)		mm	1006×385×265	1178×325×390	1178×325×390
Weight（Net/Gross）		kg	11/15.8	15.5/20.5	15.5/20.5

Notes:

① Refer to the product nameplate for parameters and specification of the unit;

② The model with GMVL code is cooling only unit; while the model with GMV code is heat pump unit; the cooling only units dose not have any parameters of performing heating;

③ The sound level was tested under circumstance of semi-anechoic chamber; the value of noise could be a little higher in actual operation.

Model			GMV(L)-R22G/NaC-K	GMV(L)-R28G/NaC-K	GMV(L)-R36G/NaC-K
Cooling Capacity		kW	2.2	2.8	3.6
		Btu	7507	9554	12284
Heating Capacity		kW	2.5	3.2	4.0
		Btu	8530	10919	13649
Air Flow Rate		m3/h	360	360	500
		CFM	212	212	294
Sound Pressure Level (H/L)		dB(A)	37/28	37/28	43/28
External Static Pressure		Pa	0	0	0
Power Supply			220-240V~50Hz	220-240V~50Hz	220-240V~50Hz
Fan Motor	Output	kW	0.014	0.014	0.022
	Running Current	A	0.15	0.15	0.22
Connecting Pipes	Gas Pipe	mm	Φ9.52	Φ9.52	Φ12.7
		inch	3/8 "	3/8 "	1/2 "
	Liquid Pipe	mm	Φ6.35	Φ6.35	Φ6.35
		inch	1/4 "	1/4 "	1/4 "
	Connection Method		Flare Connection	Flare Connection	Flare Connection
Drain Pipes (External Dia. × Thickness)		mm	ϕ20×1.5	ϕ20×1.5	ϕ20×1.5
Unit Dimensions (W×D×H)		mm	770×190×250	770×190×250	830×189×285
Package Dimensions (W×D×H)		mm	955×330×272	955×272×330	1006×395×295
Weight（Net/Gross）		kg	8/14.3	8/14.3	11/15.8

Notes:

① Refer to the product nameplate for parameters and specification of the unit;

② The model with GMVL code is cooling only unit; while the model with GMV code is heat pump unit; the cooling only units dose not have any parameters of performing heating;

③ The sound level was tested under circumstance of semi-anechoic chamber; the value of noise could be a little higher in actual operation.

Model			GMV(L)-R45G/NaC-K	GMV(L)-R71G/Na-K	GMV(L)-R80G/Na-K
Cooling Capacity		kW	4.5	7.1	8.0
		Btu	15355	24226	27297
Heating Capacity		kW	5.0	8.0	9.0
		Btu	17061	27297	30709
Air Flow Rate		m3/h	500	1200	1200
		CFM	294	706	706
Sound Pressure Level (H/L)		dB(A)	43/28	49/42	49/42
External Static Pressure		Pa	0	0	0
Power Supply			220-240V~50Hz	220-240V~50Hz	220-240V~50Hz
Fan Motor	Output	kW	0.022	0.026	0.026
	Running Current	A	0.22	0.29	0.39
Connecting Pipes	Gas Pipe	mm	Φ12.7	Φ15.9	Φ15.9
		inch	1/2 "	5/8 "	5/8 "
	Liquid Pipe	mm	Φ6.35	Φ9.52	Φ9.52
		inch	1/4 "	3/8 "	3/8 "
	Connection Method		Flare Connection	Flare Connection	Flare Connection
Drain Pipes (External Dia. × Thickness)		mm	Φ30×1.5	ϕ30×1.5	ϕ30×1.5
Unit Dimensions (W×D×H)		mm	830×189×285	1178×227×326	1178×227×326
Package Dimensions (W×D×H)		mm	1006×395×295	1365×417×333	1365×417×333
Weight（Net/Gross）		kg	11/15.8	17.5/23	17.5/23

Notes:

① Refer to the product nameplate for parameters and specification of the unit;

② The model with GMVL code is cooling only unit; while the model with GMV code is heat pump unit; the cooling only units dose not have any parameters of performing heating;

③ The sound level was tested under circumstance of semi-anechoic chamber; the value of noise could be a little higher in actual operation.

4.2.4Floor Ceiling Type

Model			GMV(L)-R28Zd/Na-K	GMV(L)-R36Zd/Na-K	GMV(L)-R50Zd/Na-K
Cooling Capacity		kW	2.8	3.6	5.0
		Btu	9554	12284	17061
Heating Capacity		kW	3.2	4.0	5.8
		Btu	10919	13649	19790
Air Flow Rate		m3/h	550	600	700
		CFM	324	353	412
Sound Pressure Level (H/L)		dB(A)	43/-	44/-	50/-
External Static Pressure		Pa	0	0	0
Power Supply			220-240V~50Hz	220-240V~50Hz	220-240V~50Hz
Fan Motor	Output	kW	0.01	0.01	0.04
	Running Current	A	0.1	0.1	0.4
Connecting Pipes	Gas Pipe	mm	Φ9.52	Φ12.7	Φ12.7
		inch	3/8 "	1/2 "	1/2 "
	Liquid Pipe	mm	Φ6.35	Φ6.35	Φ6.35
		inch	1/4 "	1/4 "	1/4 "
	Connection Method		Flare Connection	Flare Connection	Flare Connection
Drain Pipes (External Dia. × Thickness)		mm	Φ17×1.75	Φ17×1.75	Φ17×1.75
Unit Dimensions (W×D×H)		mm	840×238×695	840×238×695	840×238×695
Package Dimensions (W×D×H)		mm	1035×295×805	1035×295×805	1035×295×805
Weight（Net/Gross）		kg	28/37	28/37	28/37

Notes:

① Refer to the product nameplate for parameters and specification of the unit;

② The model with GMVL code is cooling only unit; while the model with GMV code is heat pump unit; the cooling only units dose not have any parameters of performing heating;

③ The sound level was tested under circumstance of semi-anechoic chamber; the value of noise could be a little higher in actual operation.

Model			GMV(L)-R71Zd/Na-K	GMV(L)-R90Zd/Na-K
Cooling Capacity		kW	7.1	9.0
		Btu	24226	30709
Heating Capacity		kW	8.0	10.0
		Btu	27297	34121
Air Flow Rate		m3/h	1170	2100
		CFM	689	1236
Sound Pressure Level (H/L)		dB(A)	48/-	51/-
External Static Pressure		Pa	0	0
Power Supply			220-240V～50Hz	220-240V～50Hz
Fan Motor	Output	kW	0.1	0.15
	Running Current	A	1	1.5
Connecting Pipes	Gas Pipe	mm	Φ15.9	Φ15.9
		inch	5/8 "	5/8 "
	Liquid Pipe	mm	Φ9.52	Φ9.52
		inch	3/8 "	3/8 "
	Connection Method		Flare Connection	Flare Connection
Drain Pipes (External Dia. × Thickness)		mm	Φ17×1.75	Φ17×1.75
Unit Dimensions (W×D×H)		mm	1300×188×600	1590×238×695
Package Dimensions (W×D×H)		mm	1514×248×724	1714×330×830
Weight（Net/Gross）		kg	34/38	44/53

Notes:

① Refer to the product nameplate for parameters and specification of the unit;

② The model with GMVL code is cooling only unit; while the model with GMV code is heat pump unit; the cooling only units dose not have any parameters of performing heating;

③ The sound level was tested under circumstance of semi-anechoic chamber; the value of noise could be a little higher in actual operation.

Model			GMV(L)-R112Zd/Na-K	GMV(L)-R125Zd/Na-K
Cooling Capacity		kW	11.2	12.5
		Btu	38216	42652
Heating Capacity		kW	12.5	13.5
		Btu	42652	46064
Air Flow Rate		m3/h	2200	2300
		CFM	1295	1354
Sound Pressure Level (H/L)		dB(A)	54/-	55/-
External Static Pressure		Pa	0	0
Power Supply			220-240V～50Hz	220-240V～50Hz
Fan Motor	Output	kW	0.18	0.18
	Running Current	A	1.8	1.8
Connecting Pipes	Gas Pipe	mm	Φ15.9	Φ15.9
		inch	5/8 "	5/8 "
	Liquid Pipe	mm	Φ9.52	Φ9.52
		inch	3/8 "	3/8 "
	Connection Method		Flare Connection	Flare Connection
Drain Pipes (External Dia. × Thickness)		mm	Φ17×1.75	Φ17×1.75
Unit Dimensions (W×D×H)		mm	1590×238×695	1590×238×695
Package Dimensions (W×D×H)		mm	1714×330×830	1714×330×830
Weight（Net/Gross）		kg	44/53	44/53

Notes:
① Refer to the product nameplate for parameters and specification of the unit;
② The model with GMVL code is cooling only unit; while the model with GMV code is heat pump unit; the cooling only units dose not have any parameters of performing heating;
③ The sound level was tested under circumstance of semi-anechoic chamber; the value of noise could be a little higher in actual operation.

4.3 Operation Range

Model	Range of outdoor temperature℃(°F)
Cooling	10℃(50°F)～48℃(118.4°F)
Heating	-20℃(-4°F)～27℃(8°F)

5 PIPING DIAGRAM

5.1 Cooling Only

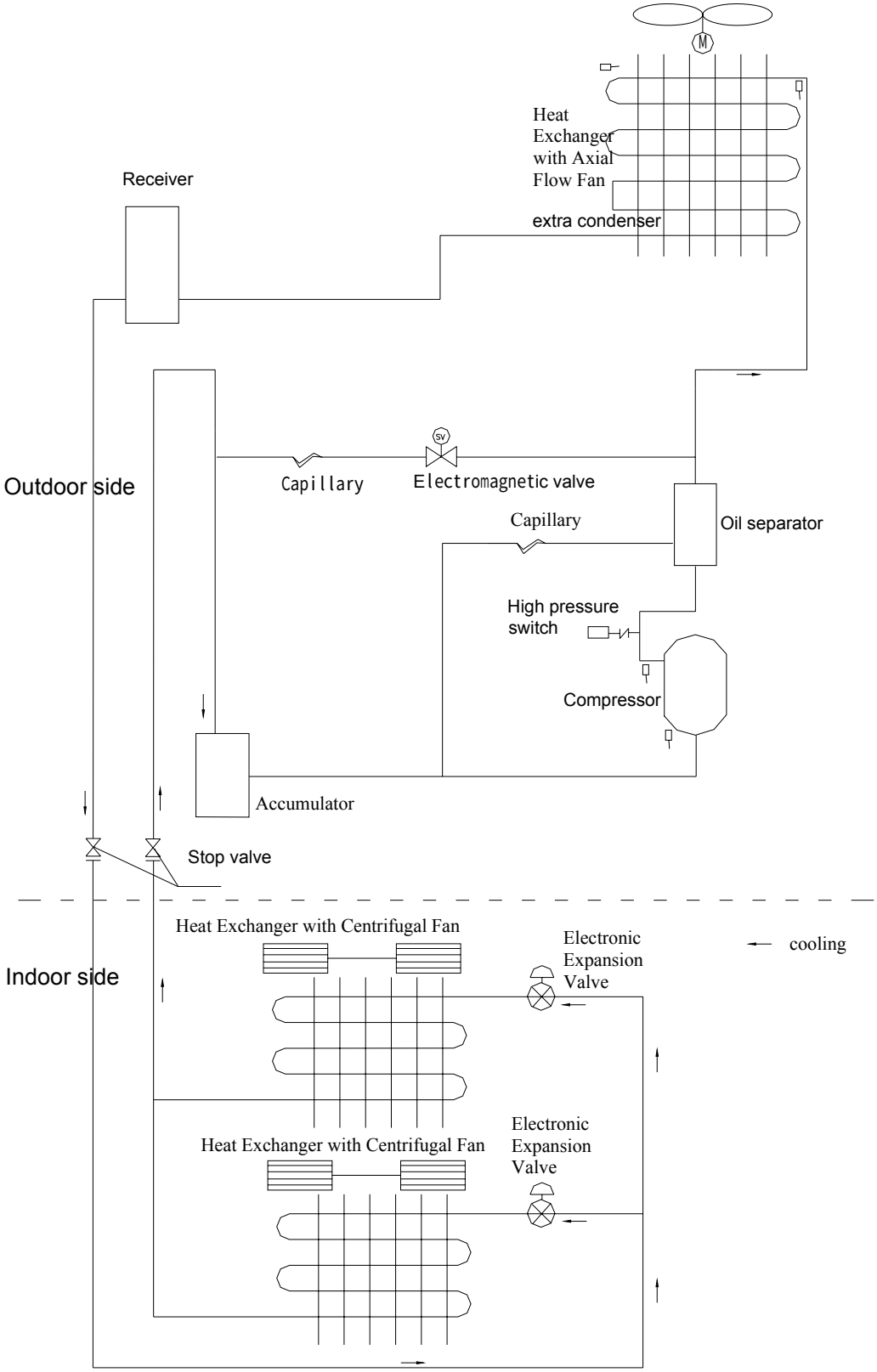

5.2 Heat Pump

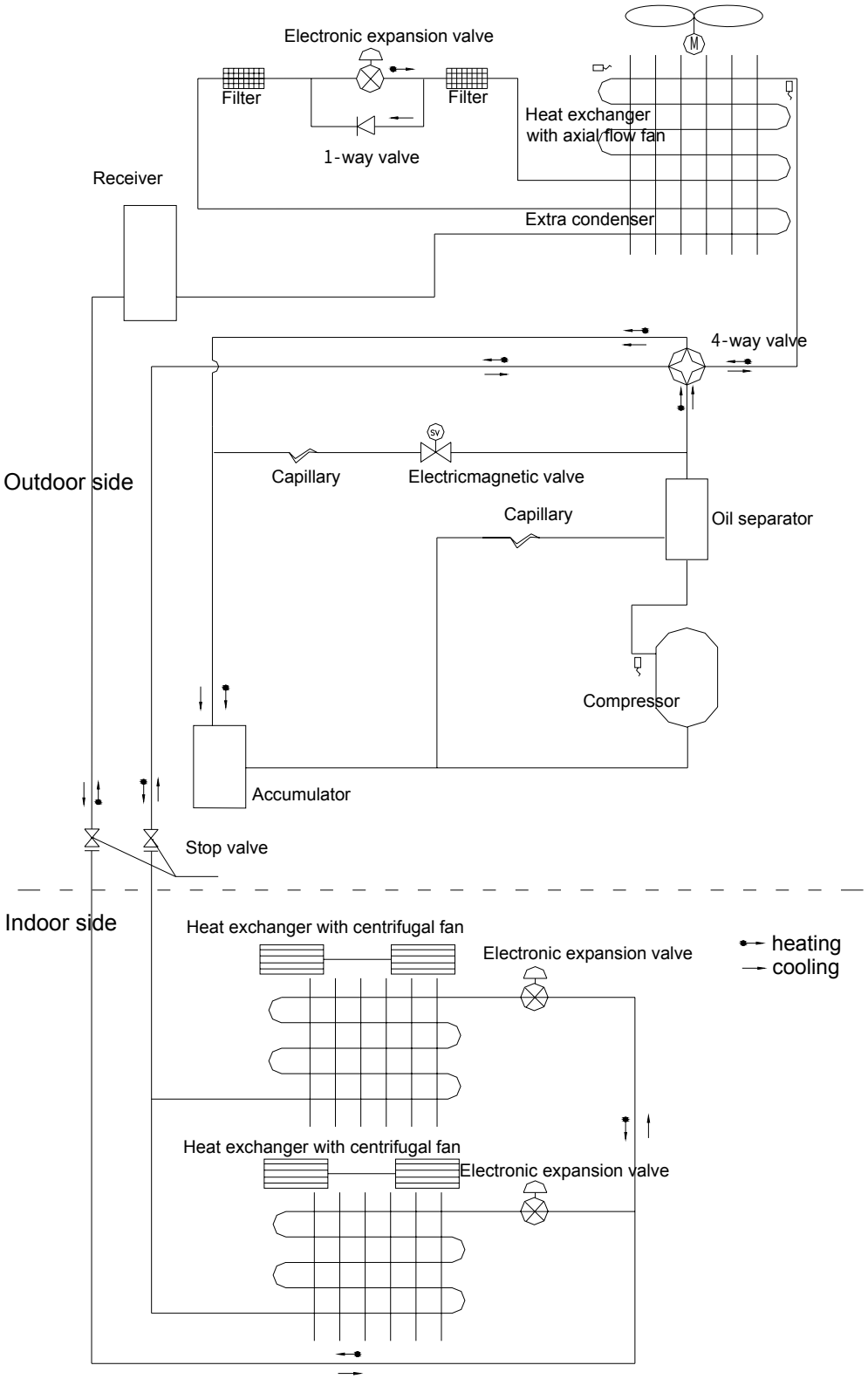
Electronic expansion valve
Filter
Filter
1-way valve
Heat exchanger
with axial flow fan
Receiver
Extra condenser
4-way valve
Outdoor side
Capillary
Electricmagnetic valve
Capillary
Oil separator
Compressor
Accumulator
Stop valve
Indoor side
Heat exchanger with centrifugal fan
Electronic expansion valve
heating
cooling
Heat exchanger with centrifugal fan
Electronic expansion valve

CONTROL

CONTROL

1 OPERATION FLOWCHART

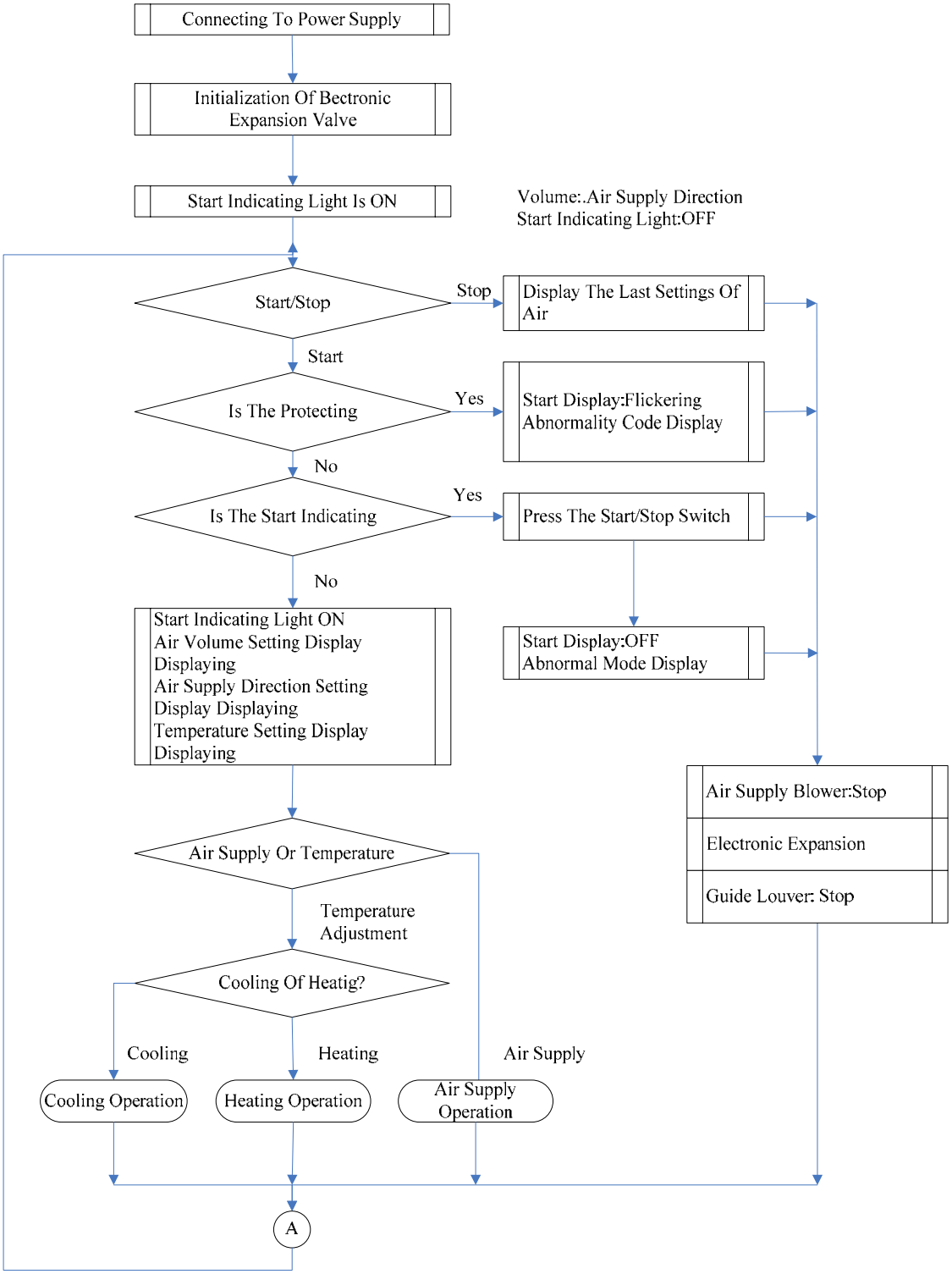

1.1 Cooling/Dry Operation

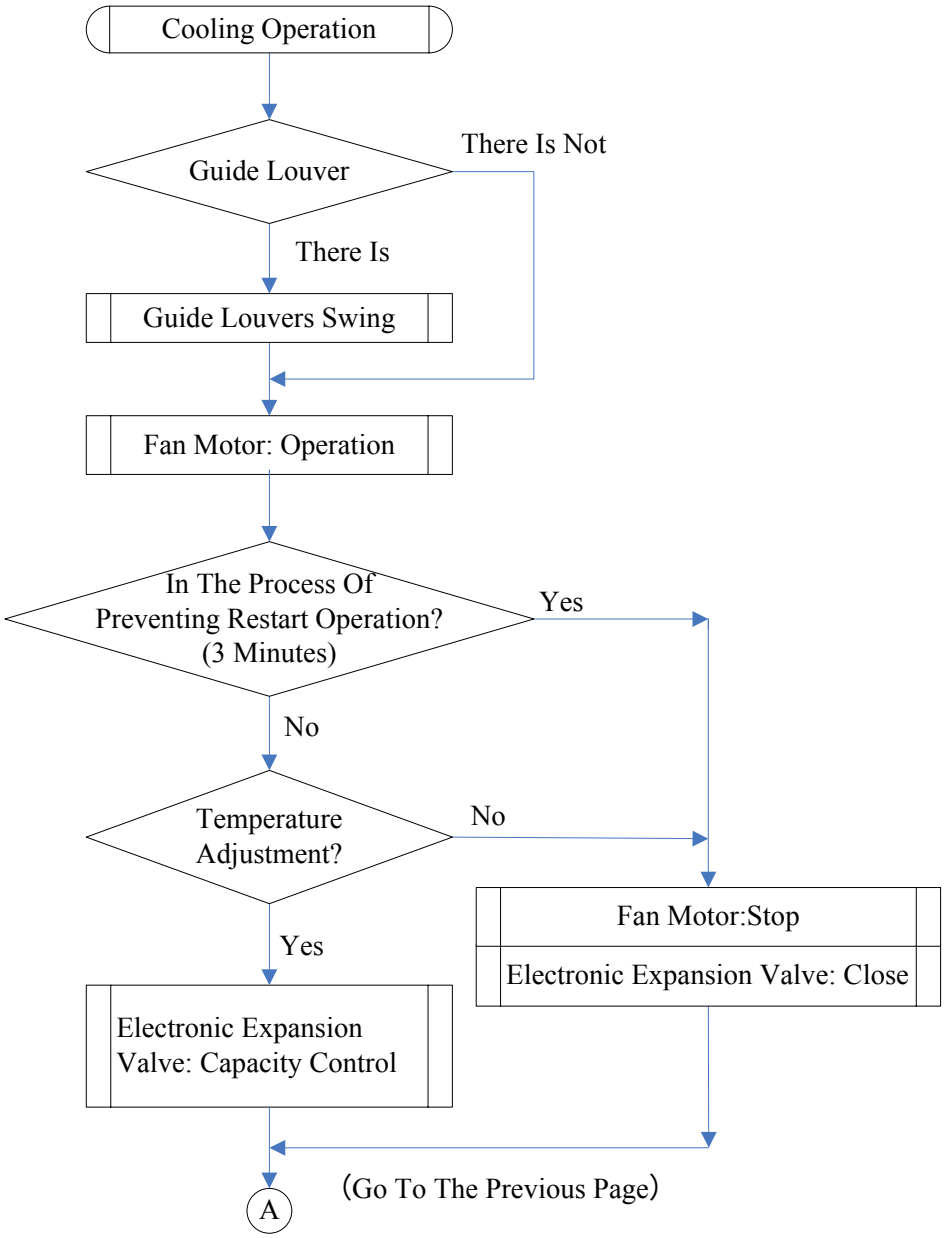

1.2 Heating Operation

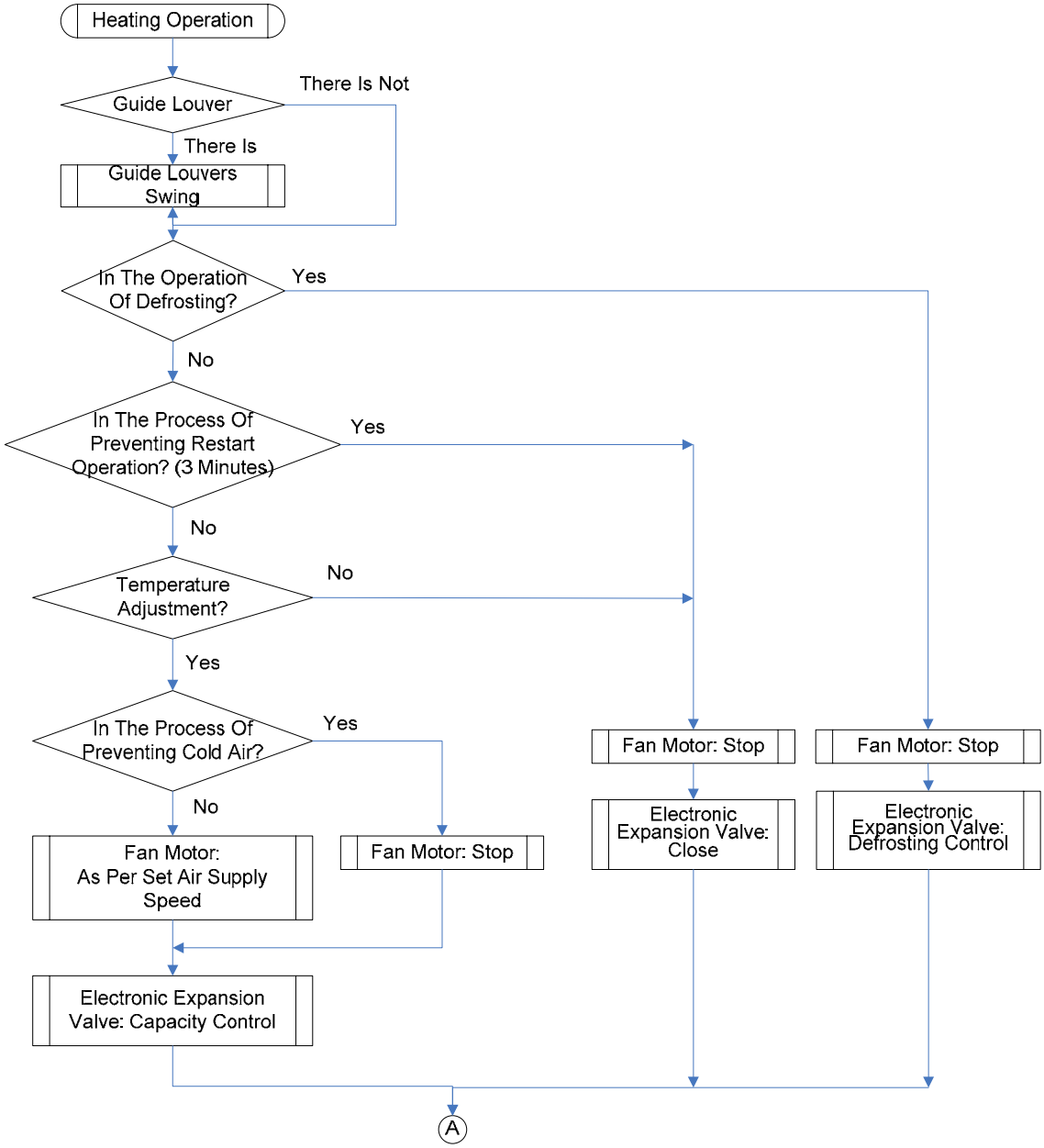

2 MAIN LOGIC

2.1 Control Function of Outdoor Unit

1) Compressor Capacity Output

It is defined that the full load capacity output of the compressor is 100%.

The compressor capacity output is calculated according to the required indoor load, which is related to the following factors: whether the indoor unit is started, the set temperature, the indoor ambient temperature, the outdoor ambient temperature, etc.

Calculation of capacity output of cooling compressor

$$Q = \frac{\sum_{i=1}^{j}(q_{iON} A_i)}{\sum_{i=1}^{j} q_i} \times 100\%$$

Calculation of capacity output of heating compressor

$$Q = \frac{\sum_{i=1}^{j}(q_{iON} A_i + q_{iOFF} \times B_i)}{\sum_{i=1}^{j} q_i} \times 100\%$$

For inverter compressor

$f = F_{\max} \times Q$,and when f is not 0,, the minimum is $F_{\min}$, the maximum is $F_{\max}$

Among which:

Q is the calculated compressor capacity output;

f Actual run frequency of inverter compressor;

$F_{\max}$ Maximum allowable run frequency of inverter compressor;

$F_{\min}$ Minimum allowable run frequency of inverter compressor

q_i Rated capacity of indoor unit

q_{iON} Rated capacity of indoor unit in ON state

q_{iOFF} Rated capacity of indoor unit in OFF state

A_i Setting temperature, correction of indoor and outdoor ambient temperature, %

B_i Capacity compensation under heating when indoor unit in OFF state, %;

2) Compressor Start Control

◆ The shortest operating time of the compressor is 6 minutes. But when the switching-off signal or the protection signal is received, the compressor must stop even if the operation of it has not lasted for 6 minutes.

◆ The shortest stoppage period of the compressor is 3 minutes. The compressor must not be started at any time within 3 minutes after the compressor is stopped.

◆ If the capacity demand of each indoor unit is 0 when the whole unit group is under heating state, the compressor must be stopped (if under the heating operation alone the temperature of stop control is reached, the compressor must be stopped).

★ Initial Sequence Chart of Cooling/Dry Modes:

During the first starting and frequency-rising process of compressor, the first dwell time is respective 3min, 5min and 5min when the frequency passed 60Hz, 75Hz and 90Hz. If high-pressure frequency-reducing and exhausting frequency-reducing happens during the process, you should quit the initial action, and deal with according to their separate

frequency-reducing.

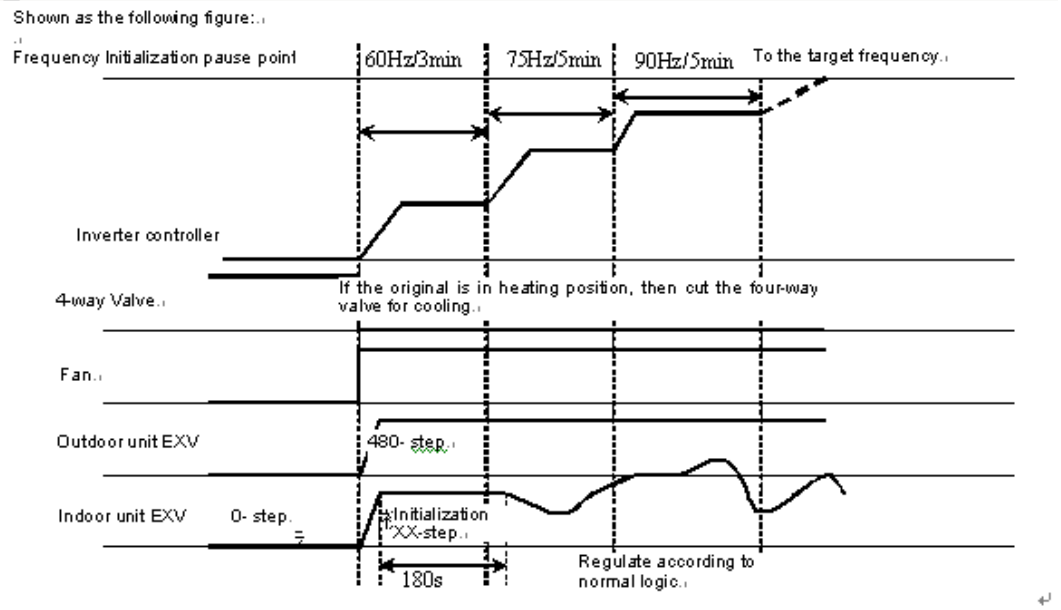

★ Initial Sequence Chart of Heating Mode:

Before the first starting of compressor, you should keep it running for 3min at 60Hz, and then switch to the target frequency. The dwell time is separately 5min and 5 min when the frequency passes 75 Hz and 90 Hz. If high-pressure frequency-reducing and exhausting frequency-reducing happens during the process, you should quit the initial action, and deal with according to their separate frequency-reducing.

Shown as the following figure:

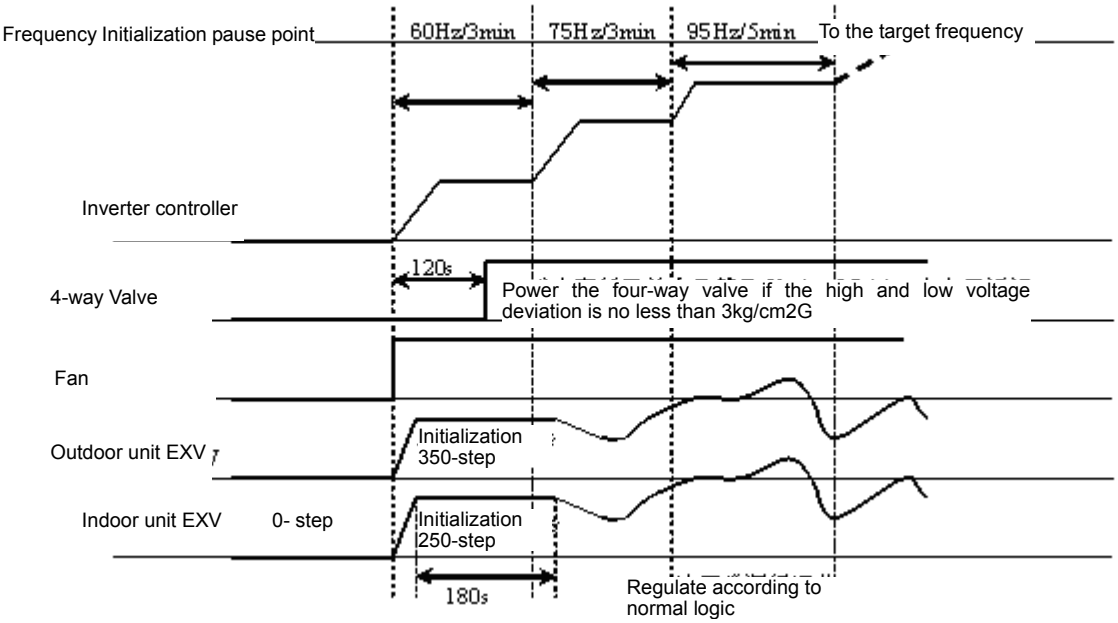

3) Outdoor fan control

Definition of fan speed: Ultra-high fan speed: the upper and lower fans are both at high speed; High fan speed: the upper and lower fans are both at medium speed; Medium fan speed: the upper and lower fan are both at low speed; Low fan speed: the upper fan is at low speed, the lower fan stops; Stop fan speed: both the upper and lower fans stop.

◆ Cooling Mode:

The fan could be switched among ultra-high - high - medium - low fan speed.

The compressor should be forced to run at high fan speed for 35 seconds before started. After the compressor started, you should not stop it within 3 minutes, but you could regulate it up to ultra-high fan speed. The discharge pressure should be measured 3 minutes later, and you can regulate the fans' speed according to the following discharge pressure:

Absolute pressure value for discharge (°C)	P≤30°C	30°C＜P≤42°C	42°C＜P≤49°C	P＞49°C
Cooling	Shutdown the fan forcibly	Turn down one grade (not including stopping windshield)	Remain	Turn up one grade

For ultra-high fan speed, you couldn't turn up the grade anymore;

◆ Heating Mode:

The fan should run at high fan speed for 35s before the compressor is started, meanwhile, it is not allowed to turn up to ultra-high fan speed within the earlier 3 minutes after the compressor started, but it could be switched to low speed and stopping fan. You could turn up to the highest level ultra-high fan speed after 3 minutes.

Pressure section:

Absolute pressure value for discharge（°C）	P≤37°C	37°C＜P＜48°C	P≥48°C
Heating	Turn up one grade	Remain	Turn down one grade

4) Defrosting Function

◆ Defrosting Start Conditions

Keep heating (the four-way valve is under the heating position) for 50 minutes; when the intermediate sensor temperature and outdoor ambient temperature retain the following curve figure for 120s,

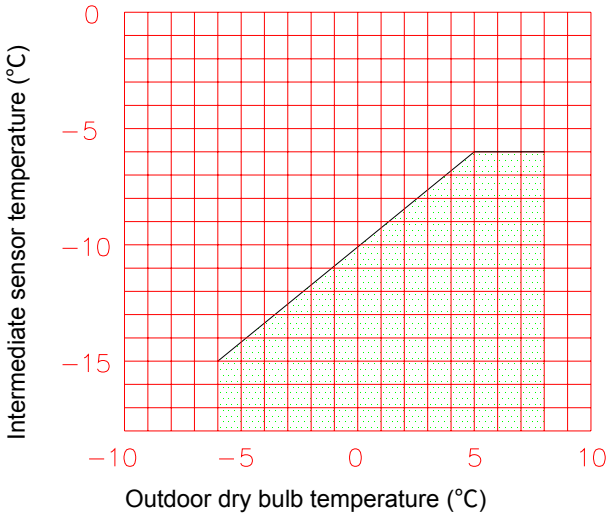

Or the outdoor ambient temperature is below -6 °C; and keeps heating (the four-way valve is under the heating position) for 2 hours;

◆ Defrosting Stop Conditions:
Outdoor coil pipe temperature is higher than 15 °C or the defrosting is running for 10 minutes continuously.

◆ Defrosting Movements:
The defrosting is made by switching four-way valve to cooling mode.

The action time for unit defrosting operation is shown as the following figure.

Timing diagram of the defrosting process

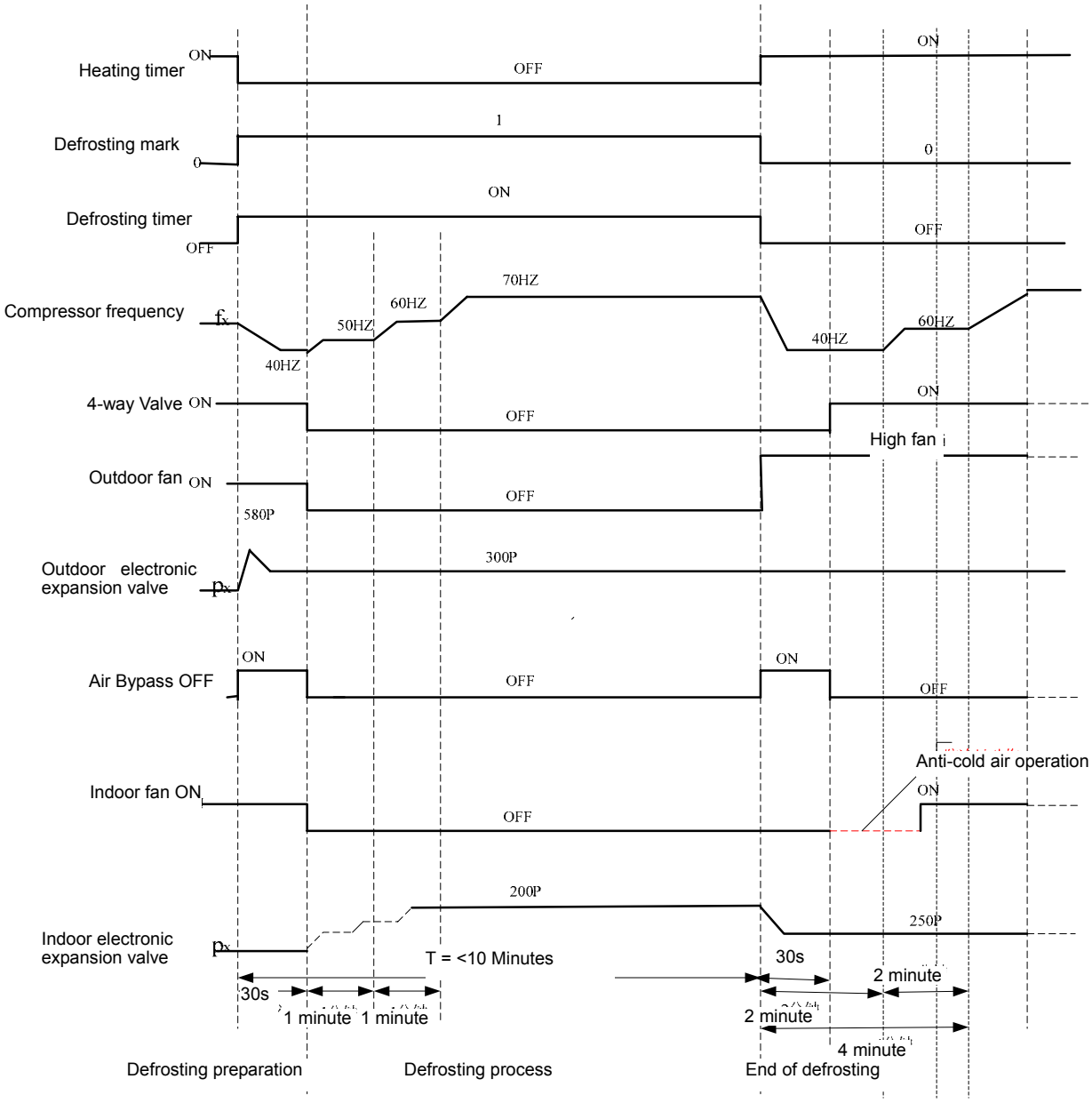

1.3.2 Control Function of Indoor Unit

1) Cooling Operation

◆ Cooling Capacity

Outdoor unit will determine the compressor capacity output according to the capacity requirements of indoor unit; Indoor unit will determine the opening of indoor electronic expansion valve by the control of outdoor unit, and the electronic expansion valve should be set once for every 40 seconds.

◆ Temperature Control

Indoor unit will control the temperature by opening and closing of indoor electronic expansion valve (Shown as the following figure):

When the indoor unit capacity requirement is 0, you should close the electronic expansion valve;

When the indoor unit of capacity requirement is not 0, you should open the electronic expansion valve

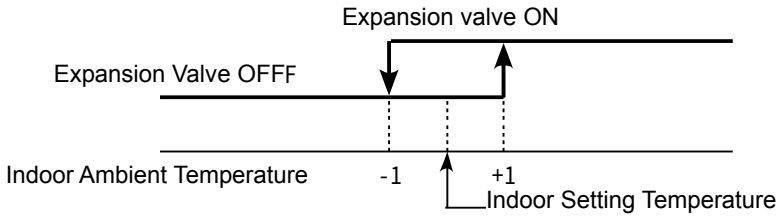

If all the indoor units' temperatures of a unit are up to temperature spot, then the capacity needs is o. the outdoor unit will stop the compressor, and all the indoor electromagnetic expansion valve will be closed.

◆Indoor Fan Action

When the indoor unit is opened and the fan is not set at automatic fan speed, the indoor fan will unceasingly

run at the set speed regardless of the capacity requirement is 0 or not.
When the indoor fan is set at automatic fan speed, the fan will determine the fan according to the changes of indoor ambient temperature, shown as the following figure:

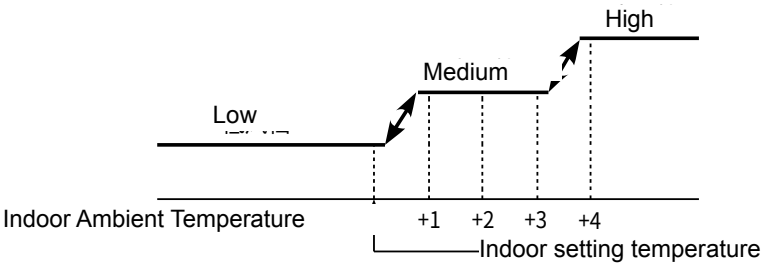

Automatic cooling fan speed
(Common)

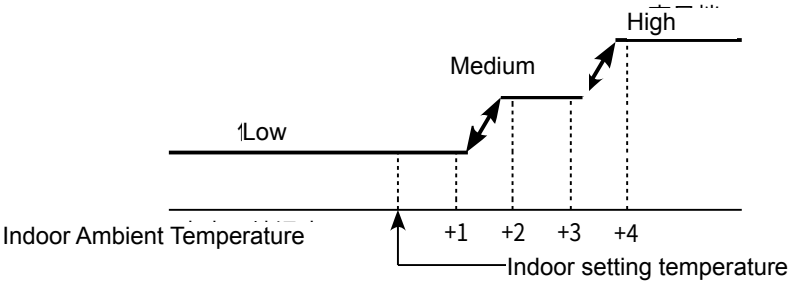

Automatic cooling fan speed
(Trendy)

Automatic fan speed switching will be detected every 30 seconds.
If the indoor fan is closed at first, the fan will be forced to run at high speed for 8s after start-up, then changed to setting speed.

◆ Blowing Residual Cold Air Control

When the indoor unit is turned off, the fan will run for 0-60 seconds at the setting speed or automatic speed
When the capacity requirement of indoor unit is 0, the electronic expansion valve of indoor unit will be closed, and then the fan will unceasingly run at the setting speed or automatic speed.

2) Dry Operation

When the units work under dry mode, the indoor fan could only work at low speed (no matter what speed is set). All other actions are the same with cooling operation. Please refer to cooling operation.

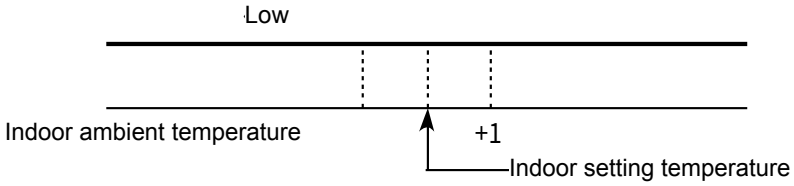

If the indoor fan is closed at first, the fan will be forced to run at high fan for 8s after start-up, then changed to setting speed.

2) Heating Operation

◆ Heating Capacity

Outdoor unit will determine the compressor capacity output according to the capacity requirements of indoor unit.
Indoor unit will determine the opening of indoor electronic expansion valve by the control of outdoor unit, and the electronic expansion valve should be set once for every 40 seconds.

◆ Temperature Control

Indoor unit will control the temperature by opening and closing of indoor electronic expansion valve (Shown as the following figure):
When the indoor unit capacity requirement is 0, the electronic expansion valve should be closed;
When the indoor unit of capacity requirement is not 0, the electronic expansion valve should be open.

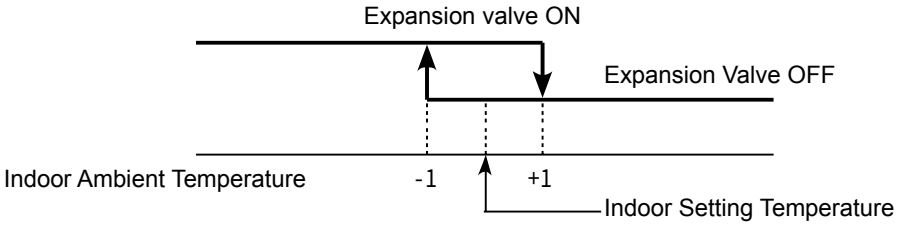

◆ Fan Control

When the indoor unit has capacity requirement:

If the automatic fan speed is not set, the indoor fans will unceasingly run at the setting speed.

When the indoor fan is set at automatic speed, the fan will determine the fan speed according to the changes of indoor ambient temperature, shown as the following figure:

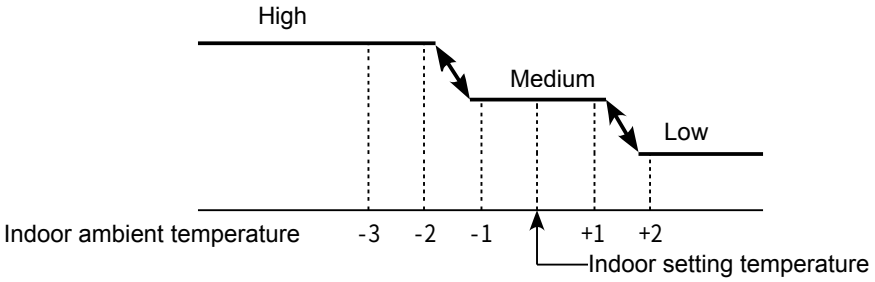

Automatic heating fan speed
(Common)

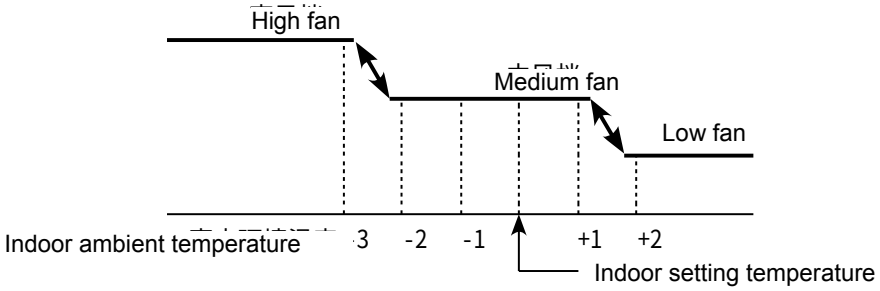

Automatic heating fan speed
(Trendy)

Automatic fan switching will be detected every 30 seconds.

If the indoor fan is closed at first, the fan will be forced to run at high fan for 8s after started-up, then changed to setting speed.

◆ Anti cold air operation

When the indoor unit has the capability requirement, the indoor fan will be forced into the off state, and run according to the following conditions:

If the indoor unit evaporator temperature $t_{evaporator}$ has reached the valve value $T_{v\text{-}evaporator}$, then the indoor fan will run at the set fan speed after running 8 seconds at high speed; If the indoor unit evaporator temperature $t_{evaporator}$ has still not reached the valve value $T_{v\text{-}evaporator}$ after 1 min, the indoor fan will be forced to run at high speed for 3s and then run at the setting speed; shown as the following table:

Anti-cold air valve value T v-evaporator table (℃)	Model	Series of cassette and duct types	Series of wall mounted type
	$T_{v\text{-}evaporator}$	35	39

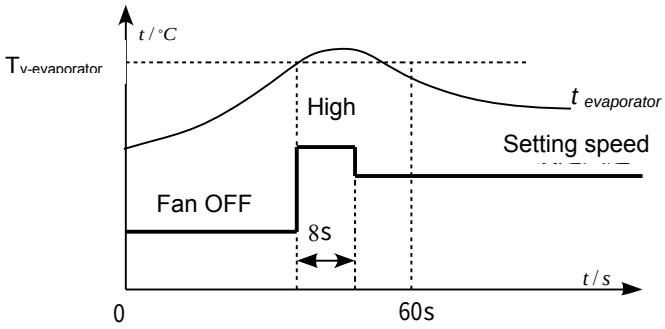

$t_{evaporator}$ Reaching the valve value within one minute

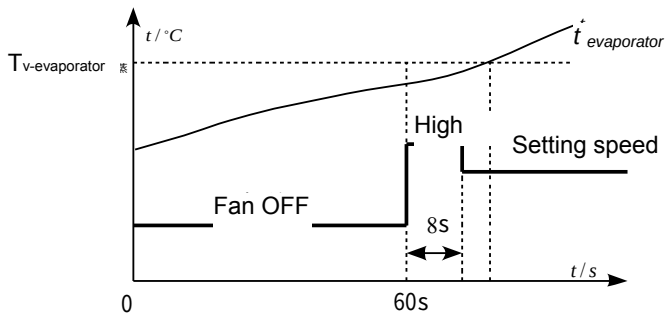

$t_{evaporator}$ Failing to reach the valve value within one minute

Once the indoor unit started under heating operation, if the fan stops in any case (including starting up, defrosting, fault, no capability needs), the anti cold air operation will keep before starting the fan for the next time.

Once the indoor fan is started, unless the fan stops, the anti cold air operation will not take effect even $t_{evaporator} < T_{v\text{-}evaporator}$ again.

◆ Blowing Residual Heat Operation

When the indoor unit runs under heating mode, if it should be stopped for reaching the temperature spot, fault, defrosting etc., you should carry on the blowing residual heat operation before stop, in order to exclude the inner surplus heat of evaporator and electric heater.

When the indoor unit needs to carry out blowing residual heat operation, the indoor fan should be switch to low fan speed, and turn off the indoor fan after running the corresponding period $T_{residual\ heat}$. Show as the following figure:

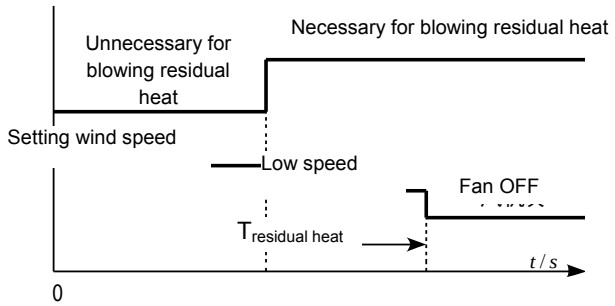

The corresponding residual heat removal period for different models in different situations is listed in the following table.

	The blowing period for residual heat in different situations $T_{residual\ heat}$ (s)			
Model	Stop	Reaching the temperature point	Entering into the defrosting	Malfunction stop
Duct Type Series	100	60-100	60	60
Wall Mounting Type Series	50	10-50	10	10
Cassette Type Series	60	Low wind, non-stop	20	20

Special case: For the indoor units of cassette series, it will run at low fan speed when it reaches the temperature point, and do not need to stop the fan.

3) Compensation for Heating Temperature

Under the standard conditions, when the air conditioner is running, the units will regulate the capacity output of indoor unit according to its setting temperature and air inlet temperature, and in order regulate the indoor temperature to the set temperature. When the air conditioner is installed too high and under the heating mode, the hot air will easily gather up due to the density, so the temperature of living space may not reach the set temperature, leading to uncomfortable feeling.

Therefore, you should use the temperature compensation function under heating mode: to reflect the real temperature of living space by reducing 2 degrees of the air inlet temperature. You may keep comfortable temperature in the living space. Shown as the following figure:

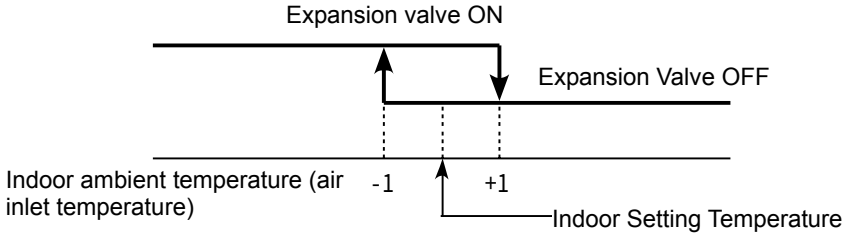

Temperature regulation under standard conditions

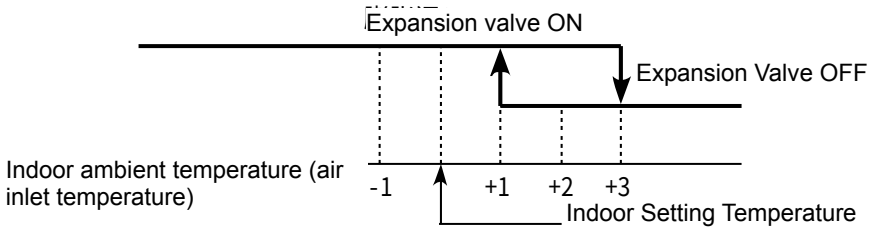

Temperature regulation with temperature compensation

4) Auto swing control

The indoor units of Wall mounting and cassette series have the swing function. By this function, you can increase the indoor air convection and the uniformity of indoor temperature regulation.

◆Reset

The swing louver will sway once automatically when electrifying for the first time. It can make the swing louver return to the initial positions, and ensure the accuracy of swing louver action.

◆Using Indoor Units' Own Buttons for Start

When you use the indoor units' own buttons for start, the automatic swing will work automatically. The swing louver will swing back and forth between the max and min positions (there are different max and min positions according to different modes)

◆ Use the Wired Controller or Remote Controller for controlling

When using the wired controller or remote controller for start, if you don't set the automatic swing signal when starting, the swing louver will stop at default location (The default locations are different according to different modes). If the automatic swing signal has been set well when starting, the automatic swing will automatically work. The swing louver will swing back and forth between the max and min positions (there are different max and min positions according to different modes).

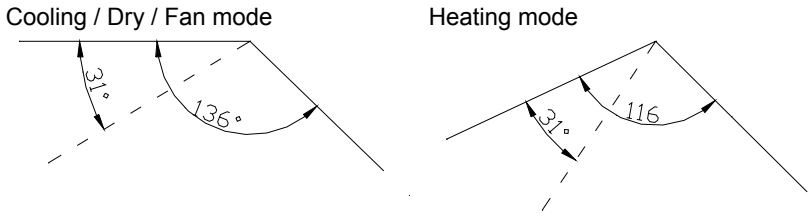

When the wired controller or remote controller sends an automatic swing signal, the automatic swing function will be started, and the swing louver begins to swing from current position.

When the wired controller or remote controller sends a stopping swing signal, the automatic swing function will be stopped, and the swing louver stops at current position.

◆ Others

When the indoor unit receives the shutdown signal, detecting the fault signal and defrosting signal unless the auxiliary electric heating protection, no matter the swing louver are under any state, they will all stop at initial position after the cessation of indoor fans.

When the indoor units detected the auxiliary electric heating protection, no matter the indoor units are under any state, the automatic swing will work, and the indoor fans will run at high speed at the same time.

5) Controlling of drainage pump motor

Cassette indoor units have drainage pump device to discharge the condensation water which is produced during cooling or drying.

◆ When the indoor unit is operating under cooling or dry mode, the water pump and compressor will start at the same time.

◆ When powering off or cooling stop, drying stop or transfering to other modes, the water pump will be powered off after five miuntes.

◆When water level is flooded for 8 second at any mode (include power-off), the water pump must be started at once. The pump will not stop running untill the flooding signal disappears and it will stop running ten minutes after

the flooding signal disappears.

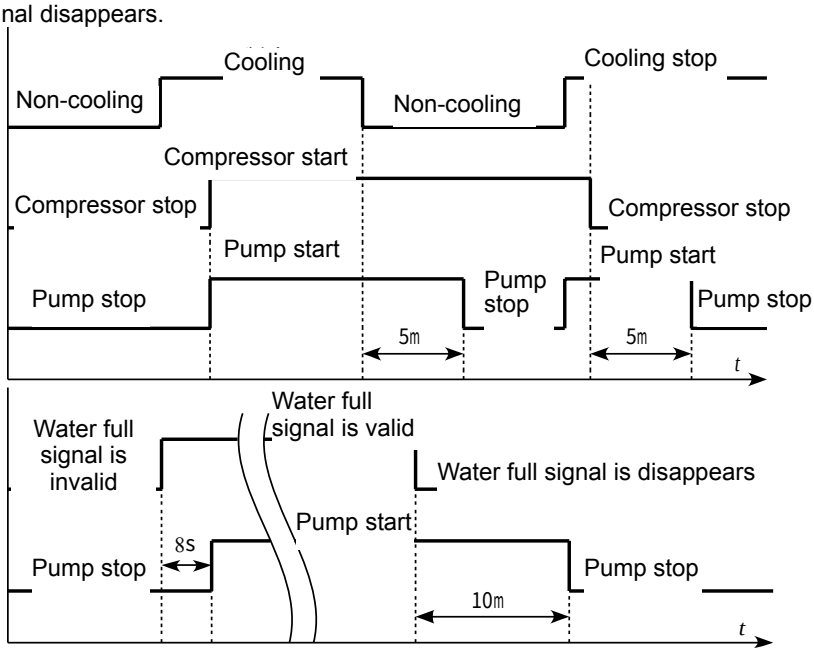

6) Anti- frosting operating undercooling and drying operation

When evaporator temperature is too low under cooling and drying operation, in order to avoid indoor unit frosting and affect the cooling effect, you should carry out anti frosting operating at approproate time.

Under cooling and drying mode, after the compressor starts for $T_{Compressor}$ (minutes), when continuously measuring that the $T_{Tube\text{-}inlet\ temperature} \leq T_{Frosting\ temperature}$ of evaporator for $T_{antifrosting}$,, the antifreezing protection will operate and the indoor fan and swing fan will keep the former state; when the $T_{Tube\text{-}inlet\ temperature} \leq T_{Frosting\ temperature}$, the LED will not light and the controller will operate as setting mode.

The parameter of $T_{Compressor}$, $T_{Defending\ frost}$, $T_{Frosting\ temperature}$ and $T_{Reset\ temperature}$ will be different according to the model, as shown:

Model	$T_{Compressor}$ (m)	$T_{Defending\ frost}$ (m)	$T_{Frosting\ temperature}$ (°C)	$T_{Reset\ temperature}$ (°C)
Series of cassete and duct type	15	10	-4	15
Series of wall mounted type	6	3	0	10

7) Controling of indoor electronic expansion valve

◆ Reset control of indoor electronic expansion valve

When the indoor unit is energized, it will automatically carry out the electronic expansion valve reposition action, to make the electronic expansion valve return the initial position, and ensure the accuracy of expansion valve's action.

◆ Controling of superheating degree in cooling mode

In the operation process of cooling and drying , to keep suitable superheating degree, the unit will control the jaw opening of indoor electronic expansion valve according to the difference between entry temperature and setting superheating value of indoor unit evaporator.It will be detected every 40 seconds. This process will stop when powering off, stop after reaching temperature point and malfunction.

◆ Controlling of supercooling degree in heating mode

In the operation process of heating, to keep suitable supercooling degree, the unit will control the jaw opening of indoor electronic expansion valve according to the difference between entry temperature and setting supercooling value of indoor unit evaporator. It will be detected every 40 seconds. This process will stop when powering off, stop after reaching temperature point and malfunction.

8) Controling of sensor test

◆ Ambient temp. sensor

When the ambient temperature is measured lower than -20°C or higer than 100°C for one minute continuously, the ambient sensor error signal will be sent(error code: F0), and then indoor unit will stop for abnormity.

When the environment sensor is in trouble, the environment temperature is tested lower than -20°C or higer than 100°C for one minute continuously, the ambient sensor error signal will disappear, and indoor unit will operate as the former state.

◆ Evaporator temp sensor

When the evaporator temperature is measured lower than -30°C or higer than 100°C for one minute continuously,the evaporator temp sensor error signal will be sent (error code: F0), and then indoor unit will stop for abnormity.

When the evaporator temperature sensor is in trouble, the evaporator temperature is measured lower than -30°C or higer than 100°C for one minute continuously,, the evaporator temperature sensor error signal will disappear, and the indoor unit will operate as the former state.
◆The measure times should not be accumulatived

Fault Type	Error Code
Indoor ambient temperature sensor error	F0
Indoor tube-inlet sensor error	F1
Indoor tube sensor error	F2
Indoor tube-exit sensor error	F2

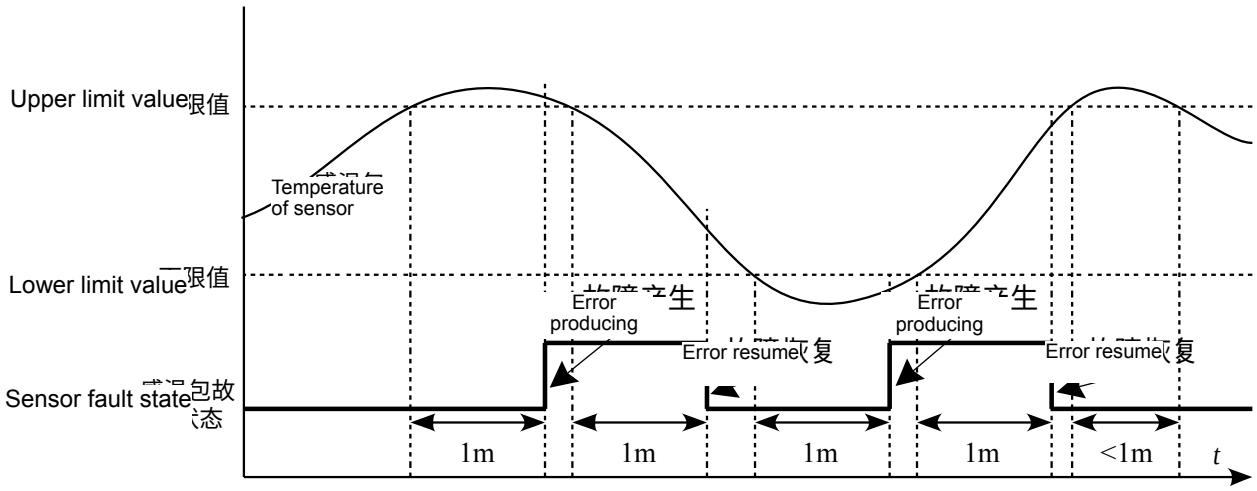

9) Address setting of indoor unit
Indoor unit at the same units must have exclusive address to operate, so you should set the address when installing the indoor unit.
The address of indoor unit at the same units is not allowed to repeat.
The address of the same indoor unit should conform to the address of remote controller.
The address setting of indoor unit and remote controller should use address DIP switch, which is set on the mainboard of indoor unit and remote control, and has the sign of “address”.

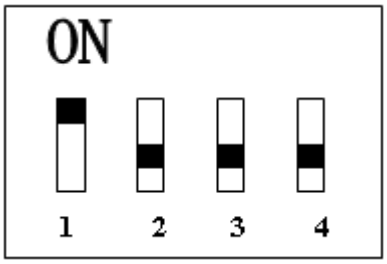

The address which DIP switch refers to is listed as follows.

Dial-up code table (4 positions DIP switch)									
Position 4	Position 3	Position 2	Position 1	Address	Position 4	Position 3	Position 2	Position 1	Address
ON	ON	ON	ON	1	OFF	ON	ON	ON	9
ON	ON	ON	OFF	2	OFF	ON	ON	OFF	10
ON	ON	OFF	ON	3	OFF	ON	OFF	ON	11
ON	ON	OFF	OFF	4	OFF	ON	OFF	OFF	12
ON	OFF	ON	ON	5	OFF	OFF	ON	ON	13
ON	OFF	ON	OFF	6	OFF	OFF	ON	OFF	14
ON	OFF	OFF	ON	7	OFF	OFF	OFF	ON	15
ON	OFF	OFF	OFF	8	OFF	OFF	OFF	OFF	16

11) About functional DIP swicth S7 (for Na-K series)
Before the mainboard is electrified, the setting of DIP swicth S7 must be finished, this switch will decide the working mode of indoor unit; the position of ducted units is 4, and other machine is 3.
Functional description as follows:

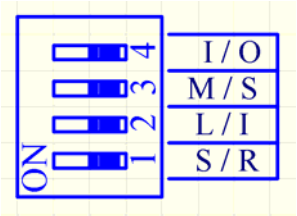

DIP swicth silk print	Functional Description	Dialing on	Dialing off
1（S / R）	**Selecting of memory mode:** **A. Electrifying renew mode and electrifying standby mode select;** **B. This function is effective without wired controller.**	**Electrifying standby**	**Electrifying renew**
2（L / I）	**Selecting of wired controller and receiver head** **A. If you select wired controller the function of receiver head will be shield;** **B. If you select receiver head the wired controller can not work.**	**Selected wired controller**	**Selected receiver head**
3（M / S）	**Setting of master / slave indoor unit:** **A. To slove the problem of mode conflict;** **B. This function will be effective when controlled without wired controller.**	**Master indoor unit**	**Slave indoor unit**
4（I / O）	**Selecting of ambient temperature sensor (Only for ducted units):** **A. Selecting of mainboard ambient temperature sensor($T_{Ambient}$ and receiver head temperature sensor($T_{Ambient1}$);** **B. This function will be effective when mainboard controlled without wired controller.**	**Ambient temperature sensor on mainboard is selected**	**Ambient temperature sensor on receiver head is selected**

Functional description of master / slave indoor unit:
◆ This function is effective without wired controller. if it has wired controller, the master / slave unit function is operated by wired controller;
◆ The complete unit will judge automatically. it will select the minimum indoor unit address code and minimum pinboard address code as master indoor unit.
◆ Once the indoor unit address is decided, the operation mode of the complete unit will follow the operation mode of the selected unit. For example, if the master indoor unit is in cooling (heating) mode, the outdoor will operate under cooling(heating) mode, and any indoor units which operate under cooling (heating) mode will show mode conflict.
◆ When the master indoor unit meets power failure or is turned off, the unit mode will be treated as the former mode conflict, i.e. the operation mode of the indoor unit mode is the operation mode of the complete unit.

About functional DIP swicth S7 (for Cassette Type)
The 3-bit dial switch must be set before energizing the main board and it determines running state of indoor unit.
Function of it is as follow:

Dial switch Silk screen	Function	Dial ON	Dial OFF
1 （S / R）	Selection of memory mode: A：Selection between reset mode and standby mode after energizing B：This function is available without wired controller.	Standby after energizing	Reset after energizing
2 （L / I）	Selection between manual controller and receiver A：If manual controller is selected, remote-control function of receiver will be shielded. B：If receiver is selected, wired controller will be non-effective.	Selecting wired controller	Selecting receiver joint

3（**M / S**）	Setting of main and slave indoor units A：For resolution of conflict among the modes. B：This function is available without wired controller.	Main indoor unit	Slave indoor unit

About functional DIP swicth S7 (for Ducted Type)

Functional DIP switch S7			
DIP switch	Description	Code Setting	
		0（ON 位）	1
1（S / R）	Memory mode setting	Energized standby（S）	Energized recovery（R）
2（L / I）	Control method setting	Wired control（L）	Remote control （I）
3（M / S）	Master/slave indoor unit setting	Master indoor unit（M）	Slave indoor unit（S）
4（I / O）	Collection point setting for ambient temp.	Return air inlet （I）	receiver（O）
5（L / H）	High-low static setting of fan	Low static pressure（L）	High static pressure（H）

Specific function of each function DIP switch is as follows:

DIP switch 1（S/R）——Memory mode setting; it includes energized standby mode and energized recovery mode. Energized standby mode is that: after the unit resumes power supply, the previous setting parameters will be maintained but cannot automatically run and such setting is factory setting (dialing the DIP switch to “ON” position); For example, setting parameters of a indoor unit are high fan speed before de-energization and 24℃ and after resuming power supply, the unit will be in standby status; Then manually turn on the unit and its parameters are still high fan speed and 24℃. Energized recovery mode is that: after the unit resumes power supply, not only it will keep the previous setting but also can automatically run; But if the unit is in turnoff status before de-energization, it will still be that status after resuming power supply.

DIP switch 2（L/I）——Control mode; it includes wired control mode and remote control mode. Wired control mode is that: control the running of indoor unit by wired controller, which is factory setting (dialing the DIP switch to “ON” position); When the setting is wired control mode, “Memory mode setting” and “Master/slave indoor unit setting” of S7 are invalid which can be directly set on the wired controller. Remote control mode is that: control the running of indoor unit by remote controller; when the setting is remote control mode, its functional code must be set in S7.

DIP switch 3（M/S）——Master/slave indoor unit setting; it is master/slave setting of indoor unit running mode, which is mainly used for people’ priority requirements (such as leaders, patients, etc.). The factory setting is master indoor unit(dialing the DIP switch to “ON” position). When settings of all indoor units are slave indoor units, outdoor unit will run in the mode of firstly started slave indoor unit. If the mode of later started slave indoor unit and mode of firstly started slave indoor unit conflict, the conflict modes error will be warned by the system and later started indoor unit cannot run. In that case, the running of the unit is decided by firstly started slave indoor unit.

When there is only one indoor unit that is set to be master indoor unit, in that case, no matter if the master indoor unit is firstly started, the conflict mode error will be warned by slave indoor unit once the mode of slave indoor unit and the mode of master indoor unit conflict (except for turnoff mode of master/slave indoor unit). And the unit will firstly run at the mode of master indoor unit

When there are multi indoor units that are set to be master indoor units, the unit will run at the mode of master indoor unit with min. address code. When the indoor unit with min. address code changes to the running status from turnoff status, modes of other master indoor units or slave indoor unit should be in the same mode with it, or the conflict mode error will be warned. Therefore, when there are multi master indoor units, set the address code from high to low according to priority.

DIP switch 4（I/O）——Collection point setting of ambient temp.; the setting is mainly used when there is high differential between temperatures of air conditioning area and return air of the unit. The setting is valid only when there is receiver and includes collection points setting of temperatures of return air inlet e and receiver head. The factory setting is the collection points setting of temperature of return air inlet(dialing the DIP switch to the “ON” position.

DIP switch 5（L/H）——High-low static pressure setting of fan; it includes high static pressure setting of fan and low static pressure setting of fan, which should be adjusted according to the project.

Cautions:

1）.Code setting must be under off state of power.

2）. There is 3-bit, 4-bit or 5-bit DIP switch. 4-bit or 5-bit DIP switch is only applicable to ducted type unit(including GMV Multi VRF ducted type units and ducted type split)

3）.；When the control setting is "L", the Master/slave and memory setting on the main board is invalid. When the control setting is “I”, the code setting is valid.

4）. The dial-up position shall be at ON which means 0 or at opposite position which means 1. Dial-upswitch at middle position is prohibited.

5）. After dialing up, please record address code of the unit （√）.

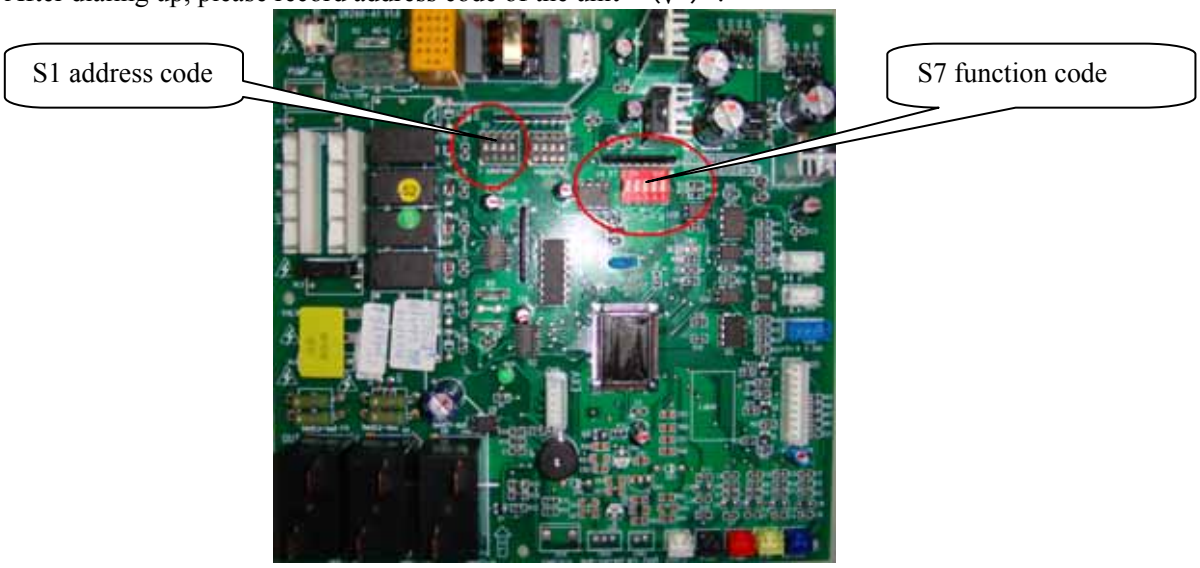

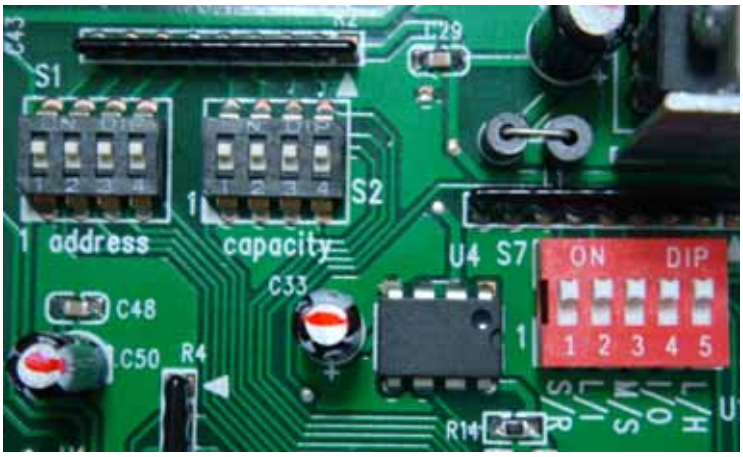

5-bit functional DIP switch

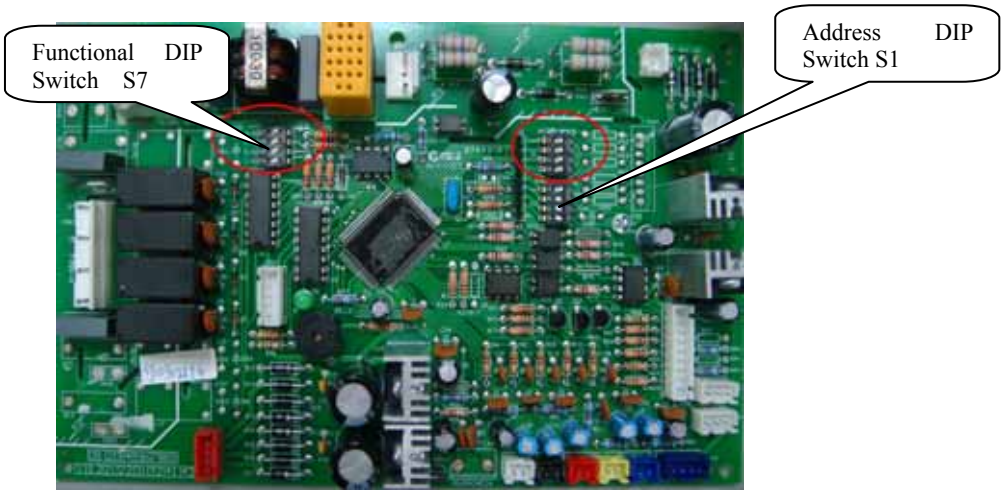

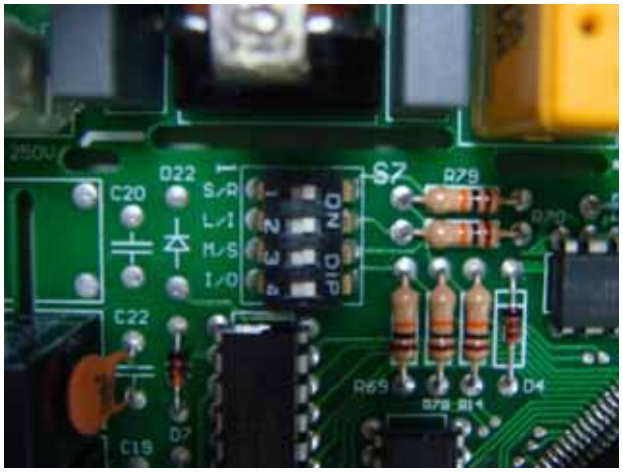

Mainboard of 4-bit Functional DIP switch

3 WIRELESS REMOTE CONTROLLER

NOTE!

- Make sure that there is no obstruction between the remote control and the signal receptor.
- The remote control signal can be received at the distance of up to about 10m.
- Don’t drop or throw the remote control.
- Don’t let any liquid flow into the remote control.
- Don’t put the remote control directly under the sunlight or any place where is very hot.

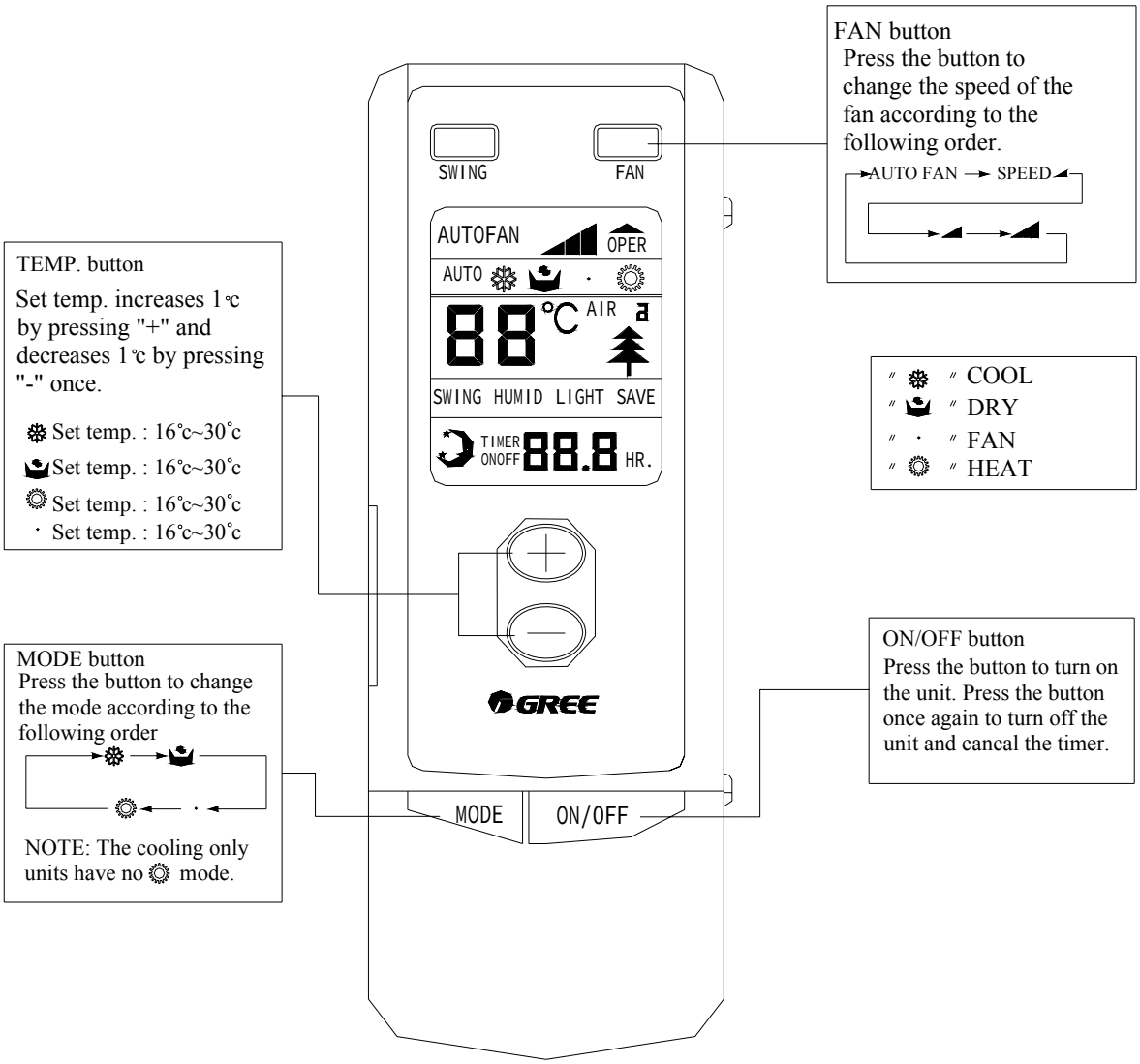

NOTE!

After every indoor unit received the turn off signal, the fan and electric inflate valve will continue to work for 20-70mins to make use of the rest cool or rest heat, while for preparation for the nest work. And this is normal phenomenon.

NOTE!

This type of remote control is a kind of general use remote control that is suitable for several types (function) of air conditioner units. Please understand that the functions and buttons that are not suitable for this air conditioner will not be introduced.

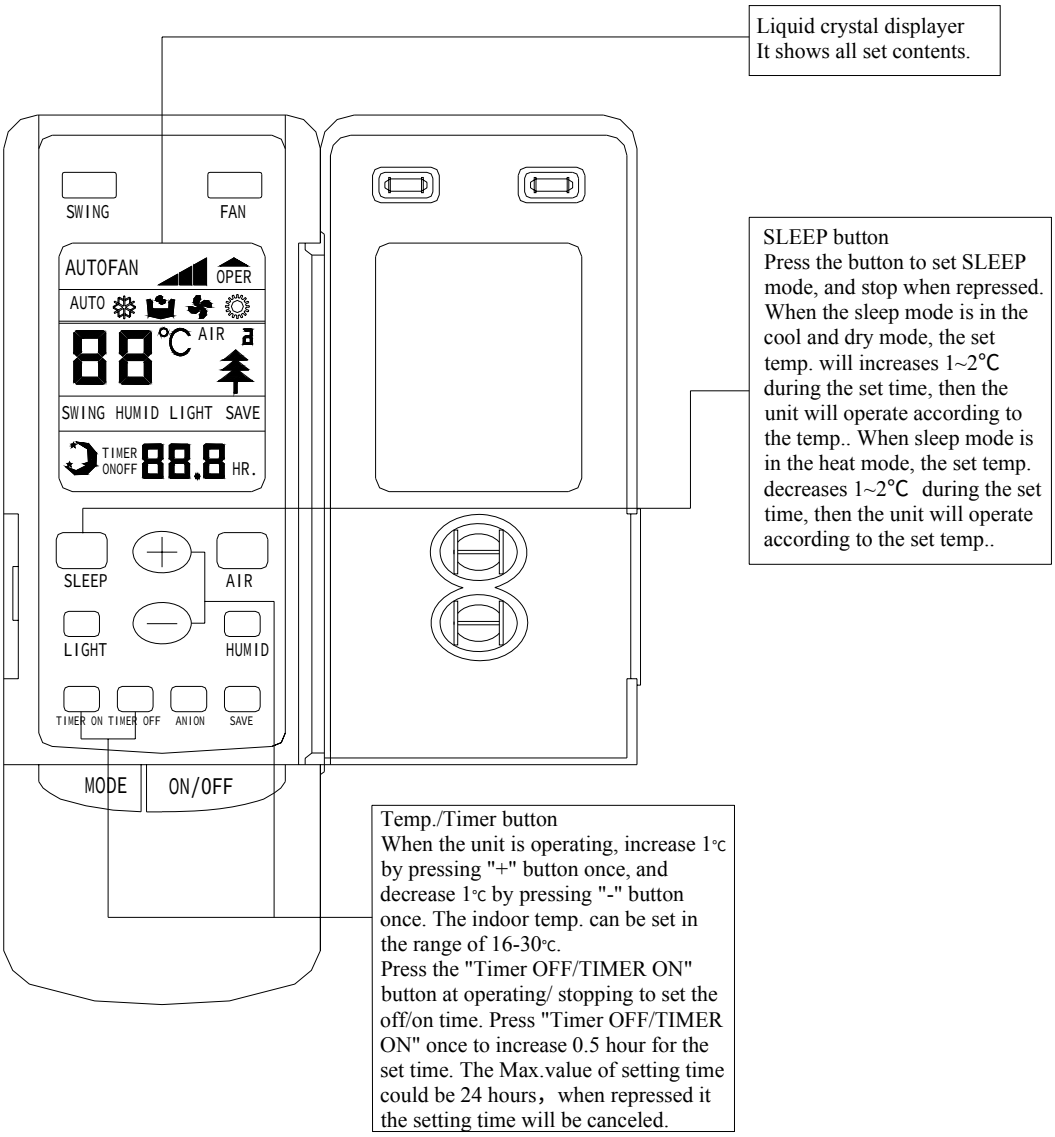

Operation procedure

Normal procedure

1. Press ON/OFF button after connected with the power, then the unit is operating.
2. Press MODE button to choose the need operation mode.
3. Press FAN button to set the fan speed.
4. Press +/- button to set the need temp.

Selectable procedure

5. Press SLEEP mode to set the sleep state.
6. Press TIMER OFF button to set the set time.

Note: When the operating mode selected by the indoor unit is clash with the one selected by the outdoor unit, the remote controller will display the operating clash after 5 seconds and the power light will flicker, then the indoor unit turns off. At this time, the units will become normal after the operating mode of the indoor unit is changed to cooperate with the outdoor unit. Cool mode can cooperate with dry mode, and fan mode can cooperate with any mode.

How to insert batteries

Two batteries (Two AAA dry-cell batteries) are used by the remote control

1. Remote the cover from the back of the remote control downward, take out the worn batteries and insert two new ones (Make sure the two poles are correct)
2. Re-attach the cover.

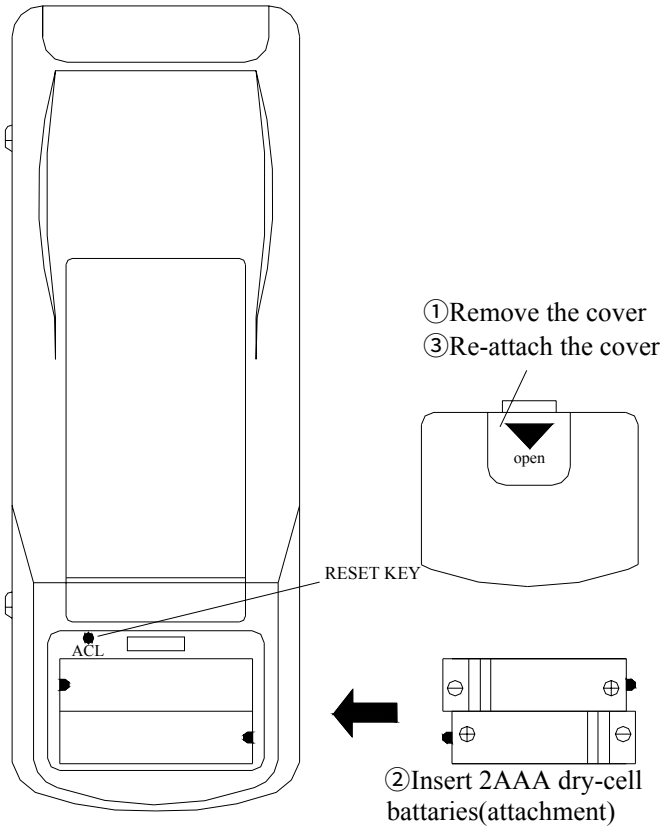

1.All the prints and code no. will be showed on the displayer after the insert of batteries. The remote control can be operated after 10sec.
2.The lifetime of the batteries is about one year.
3.Don't confuse the new and worn or different types of batteries.
4.Remove batteries when the remote control is not in use for a longtime to avoid mal-function caused by liquid leakage.
5.The remote control should be placed about 1m or more from the TV set or any other electric appliances.
6.The remote control should be used in the receivable range (the reception range is 10m)
7.When the remote control can not be controlled in the situation of inserted batteries, please remove the back cover and press "ACL" button to make it normal.

4 WIRED CONTROLLER

4.1 Operation and Display View

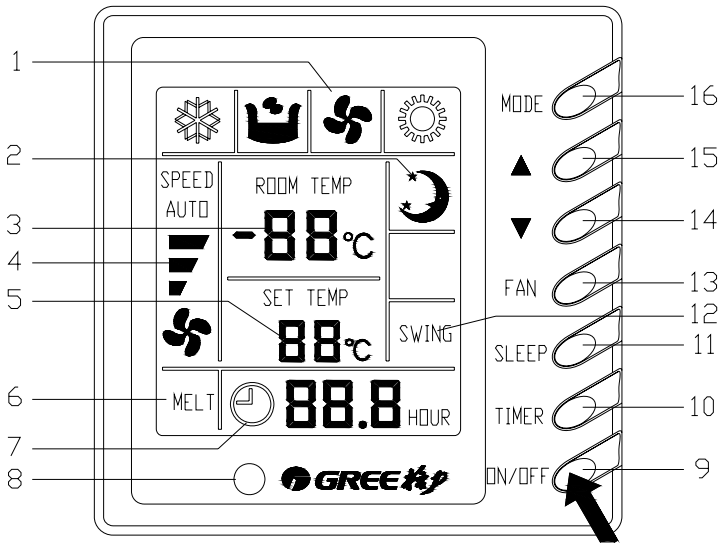

Fig.4.1

Various Components of Wired controller			
1	Operating mode display (Cool, Dry, Fan, Heat)	9	On/Off button
2	Sleep mode display	10	Timer button
3	Ambient temp.display /Malfunction display	11	Sleep button
4	Fan control display (automatic, high, media, low)	12	Swing display
5	Set Temp. display	13	Fan control button
6	Defrosting display	14	Temp./ Timer decrease button
7	Timer display	15	Temp./ Timer increase button
8	Signal receptor	16	Mode button

4.2 Dimension

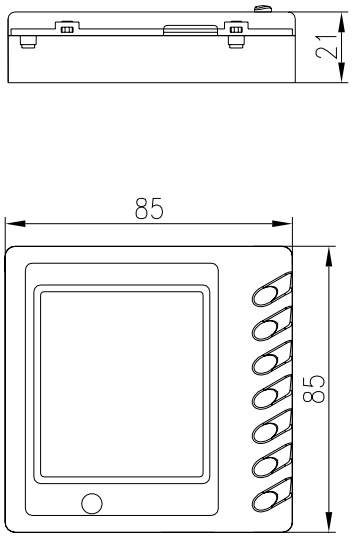

Fig.4.2.1 Outline Dimension

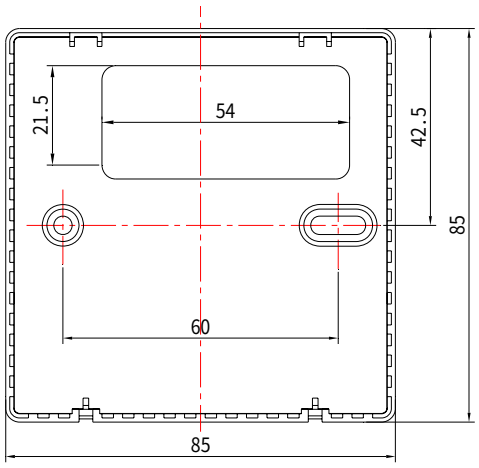

Fig.4.2.2 Installation Dimension

4.3 Installation

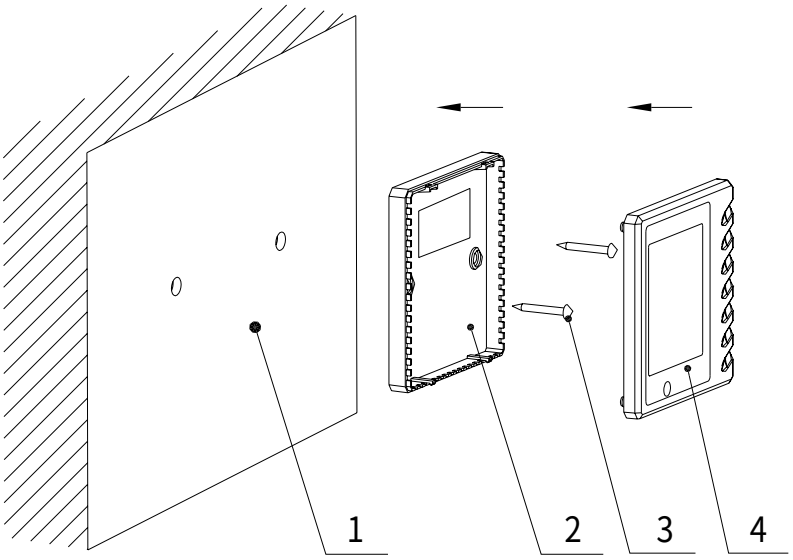

Fig.4.3 Installation of wired controller

SN	1	2	3	4
Name	Casing base, installed into the wall	Controller Soleplate	Screw M4X25	Controller Panel

●Notice for installation under the guidance of Fig.10

1. Cut off power supply before installing the electrical components.It is forbidden to carry out the installation with power on;
2. Get one end of the 4 core communication cable and put it through the rectangular hole on the base board on the wired controller;
3. Hold the base board of controller on the wall, and then fix it to the wall with M4x25 screw;
4. Plug the 4 core communication cable into the slot on the wired controller, and then fix the controller panel with base board together;

5 MINI CENTRALIZED CONTROLLER (REGION CONTROLLER)

5.1 Function

Region monitoring control and region wired control are the two main control functions for region controller.
Region monitoring controller can monitor or control 16 indoor units of a group for inquiry and single or centralized control.
Region wired controller can replace 1-16 selected wired controllers to uniformly set or control the indoor units.
Refer to Fig.1.1, Fig.1.2 about the Sketch map to the relation among the region controller, region monitoring controller and region wired controller.

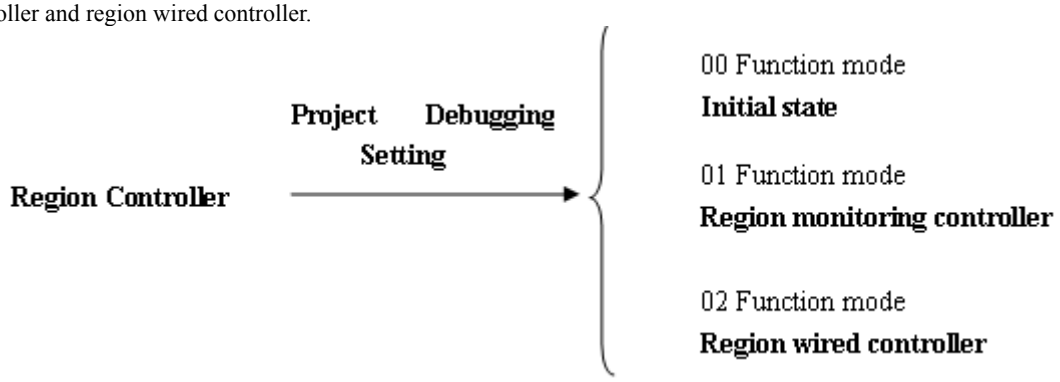

Fig.1.1

Before using, the controller functions must be selected by the personnel who performance the installation with the requirements of users. Please refer to **Project Debugging Setting** section for the details.
Note: If the controller is set to be region wired controller, the wired controller of the selected indoor unit must be removed.

The region controller can be matched with long-distance monitor. As a region monitoring controller, its control is subject to that of the long-distance monitor. In the same group, one of the region controllers can be used as region monitoring controller and matches one or more region wired controller which replace(s) one or more wired controller, in which case, the region monitoring controller can also monitor or control the region wired controller.

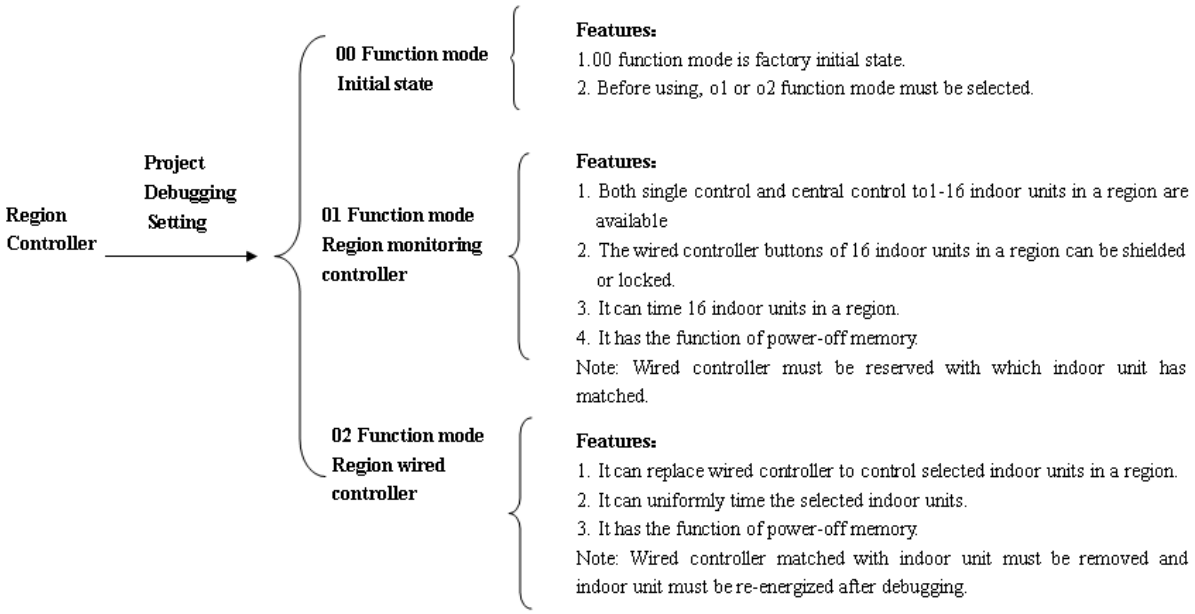

Fig.1.2 Sketch map to the relation among the region controller, region monitoring controller and region wired controller

5.2 Operation View

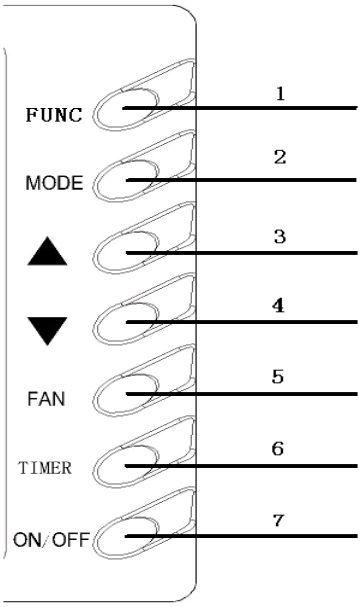

(Fig.5.2)

Instruction to functions of buttons (Table 5.1)

No.	Name	Function
1	FUNC (FUNCTION)	A. Switch the control mode of inquiry/single/ central control. B. In central control status, give the central order by successively pressing FUNC button.
2	MODE	Set cooling/heating/fan/dry mode for indoor unit
3	▲	A. Inquiry status: cycle, increase or decrease No. of indoor units to easily inquire the status of each indoor unit. B. Single/Central control status: set running temp. of indoor unit, maximum is 30℃ and minimum is 16℃. C. Timer setting status: increase or decrease the timer on/off time, maximum is 24hr and minimum is 0.
4	▼	
5	FAN	A. Set the indoor fan speed of hi/mid/low/auto. B. Successively press FAN button to set on/off swing.
6	TIMER	A. Under single/central control mode, set on /off timer of selected indoor unit B. Under inquiry status, inquire the timer setting of the indoor unit with current address.
7	ON/OFF	Set ON/OFF of the indoor unit.
2MODE and 7 ON/OFF	Lock	Under single/central control, press MODE and ON/OFF buttons simultaneously to start/ stop the lock of operation to buttons of wired controller for selected indoor units.
2MODE and 6 TIMER	Shield mode	Under single/central control, press MODE and TIMER simultaneously to start/ stop the shield of operation to MODE button of wired controller for selected indoor unit.
4 ▼and 6 TIMER	Shielding Temp.	Under single/central control, press ▼ and TIMER simultaneously to start/ stop the shield of operation to Temp button of wired controller for selected indoor unit.
7 ON/OFF and 6 TIMER	Shielding ON/OFF	Under single/central control, press ON/OFF and TIMER simultaneously to start/ stop the shield of operation to ON/OFF button of wired controller for selected indoor unit.
2 MODE and 3 ▲	Memory mode	Refer to **power-off memory function** about the details.
4 ▼and 7 ON/OFF	Selection of function	A. Check the control mode of region monitoring controller / region wired controller B. Set the control mode of region monitoring controller / region wired controller
Note: 1.The characters with gray back ground indicate buttons. Following part is the same to it. 2. The time of single press of the button is more than 3s, which means successively-press. 3. There isn't the function that the region wired controller shields other indoor wired controller.		

5.3 Display View

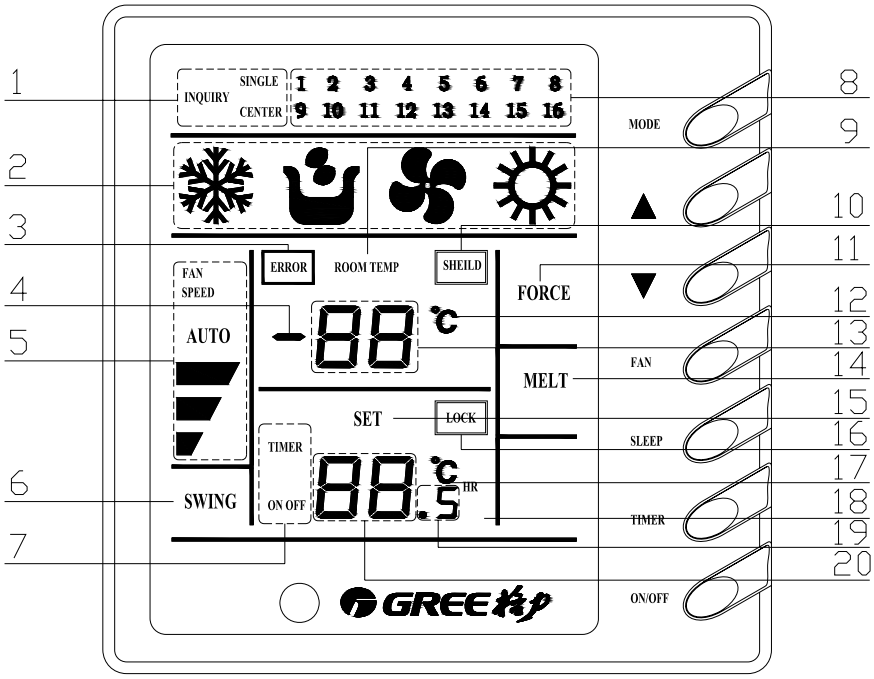

(Fig.5.3)

No.	Display name	Instruction to display
1	Control mode	Inquiry state, “INQUIRY” is displayed. Single control state,”SINGLE” is displayed. Centralized control state, “CENTER” is displayed.
2	Running mode	Each indoor unit running mode is displayed.
3	Error	“ERROR” is displayed during any malfunction to indoor or outdoor unit in a group.
4	—	“— “ is displayed when there is no malfunction to selected indoor unit and the ambient temp. is below zero.
5	Fan speed display	Hi, mid, low or auto speed of indoor fan is displayed.
6	Swing	Swing running of indoor unit is displayed.
7	Timer	“TIMER ON/OFF” is displayed when setting timer or inquiring timer state.
8	No. of indoor unit	Under inquiry state, No. of online indoor units are displayed and No. of selected indoor unit will blink. Under single control state, only No. of selected indoor unit is displayed. Under centralized state, No. of all online indoor units are displayed.
9	Room temp.	“ROOMTEMP” is displayed for no malfunction, but isn’t for malfunction.
10	Shield	Centralized controller A. Under inquiry state,” SHIELD” will be displayed when selected indoor unit is shielded. B. Under control state,” SHIELD” will be displayed during setting or giving the shield order. Region wired controller:” SHIELD” will be displayed when selected units are shielded during long-distance monitoring.
11	Force	“FORCE” is displayed when indoor unit is forced to run.
12	℃ (room temp.)	“ ℃” is displayed when there is no malfunction.
13	Room temp. or error code	Room temp. value is displayed during no malfunction to selected indoor or outdoor unit. Error code is displayed during malfunction to selected indoor or outdoor unit.

14	Melt	"Melt" is displayed during defrosting.
15	Lock	Region monitoring controller A: Inquiry state: "LOCK" is displayed when selected indoor unit is locked. B: Control state: "LOCK" is displayed during setting or giving the lock order. Region wired controller: "LOCK" is displayed when selected unit is locked in long-distance monitoring.
16	Set	"SET" blinks when the unit is on and commanded. "SET" is displayed when the unit is on without command.
17	℃ (set temp.)	Set temp. value is displayed when the selected indoor unit is on and not in timer inquiry or setting status.
18	HR (hour)	"HR" is displayed during timer inquiry or setting.
19	.5	".5" is displayed when the timer time value includes 0.5 hr and the unit is during timer inquiry or setting.
20	Setting temp. and timer time	During timer inquiry, integer of setting time of timer is displayed. During timer setting, integer of setting time of timer is displayed. Set temp. value is displayed when the unit is not during timer inquiry or setting.
Note: 1. Contents in the double quotation marks indicate the display in LCD. Following part is the same to it. 2. Online indoor units to Mini Centralized Controller indicate that in a region. Following part is the same to it. 3. No signal control function for region wired controller, and "SINGLE" won't be displayed either.		

5.4 Connection between Controller and Unit

Insert the 4-core twisted pair line to wired controller, if which is with the indoor unit, into region controller wiring terminal CN1 (or CN2), and then connect the other wiring terminal CN2 (or CN1) with the main board of indoor unit.
If there is no wired controller with indoor unit, introduce a 4-core twisted pair line to indoor unit main board and connect it with region controller wiring terminal CN1 (or CN2).
Note： Any main board of the indoor unit controlled by the region controller can be connected. If the region controller is used as a region wired controller, wired controller with the indoor unit must be removed.

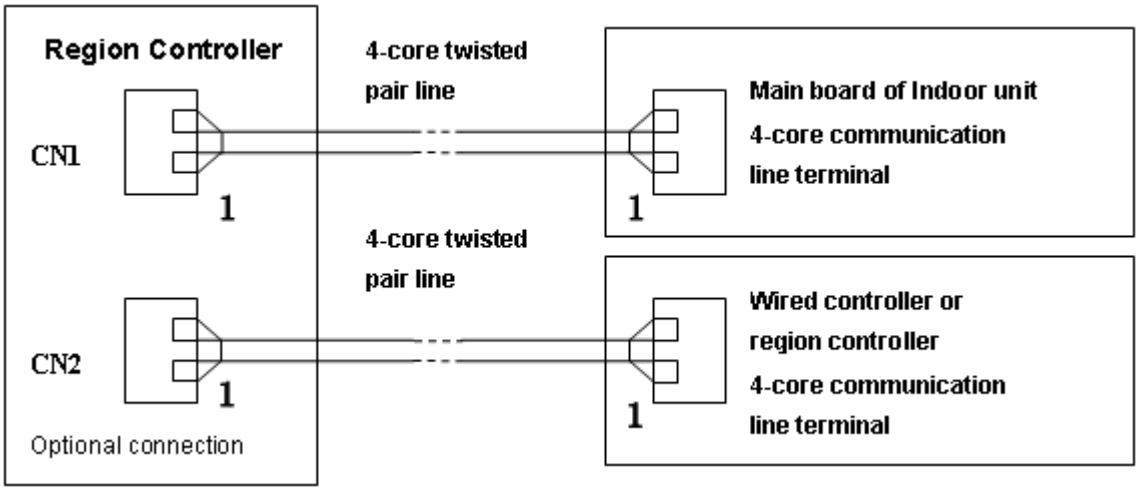

Fig2.1 Power cords and communication lines for region controller

Before installation and connection, make sure the power supply is off. After installation and connection, check the connection result again to prevent loose or short.
There are 4 connection lines (included in the 4-core twisted pair line) to the controller, from CN1 or the upper and right CN2 to the upper they respectively are: Ground line (GND), communication line A (A), communication line B(B) and power cord (+12 v).

⚠ **Note:**
During following connection of wirings, pay special attention to them to avoid malfunction to units for

electromagnetic interference.

1. Keep the signal lines or wirings (communication) of region controller or wired controller at least 20 cm from the power cords or connecting lines between indoors and outdoors to prevent abnormal communication.

2. Shielding twisted pair line must be adopted as signal line or wiring (communication) once the unit is installed in the place where there is serious electromagnetic interference.

6 CENTRALIZED CONTROLLER

6.1 Function

Main characteristics of Centralized Controller:

- A set of Centralized Controller can control 64 communication modules and can connect to as much as 1024 indoor units. It can conduct individual control with any separated area or unified control. It can monitor or control On/Off, Mode, Temperature setting and Timer On/Off of indoor unit etc.
- It can realize the central, single or select control to all indoor units.
- It can organize several indoor units into groups as you desired and conduct unified control—Group select control.
- Error contents are shown by codes. Corresponding communication module numbers of the indoor units with error contents would blink for rapid inspection and repair (There is sound warning for a few errors).
- Timer function. Every indoor unit can set Timer On/Off time by central, single or select control. Both Timer On time and Timer Off time can be set at the same time, and it is available to set the timer to which day among the 7 days from Sunday to Saturday works.
- Clock function displays in year, month, day, hour, minute and week, and the clock can be manually adjusted.
- Indoor and outdoor units online auto detect, display and working state indication.
- Self-inspection function is remained.
- Centralized Controller and several communication modules formed communication net, the length of communication wire of the net can be as long as 1km (without using communication repeaters).

6.2 Operation View

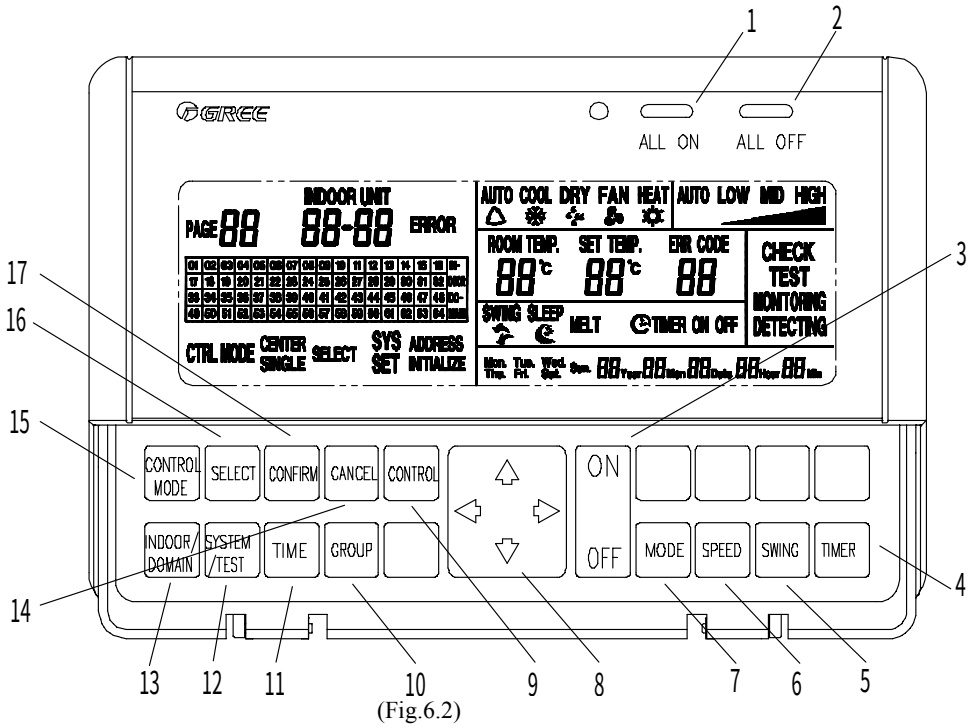

(Fig.6.2)

1	ALL ON	This central control has Sequence On function, that enable conduction to sequence control to communication modular in interval of 2 seconds, communication modular controls Sequence On of indoor units (to lower impact to power network).
2	ALL OFF	This central control has Sequence Off function, that enable conduction of sequence control to communication modular in interval of 2 seconds, communication module controls Sequence Off of indoor units (to lower impact to power network).
3	ON/OFF (2)	For controlling units' on and off.
4	TIMER	Set and check the time of Timer On and Timer Off of indoor unit and date mode.
5	SWING	Set if indoor unit swings
6	SPEED	Set fan speeds of High, Medium, Low or Auto for indoor unit
7	MODE	Set modes of Cool, Dry, Fan or Heat for indoor unit
8	LEFT/RIGHT UP/DOWN	It works as direction and adjusting under every operation function. Such as: When checking, it can move to the required indoor unit or communication modular by using this button; when adjusting time, press LEFT (/RIGHT) to shift "Y/M/D" etc. and press UP (/DOWN) to adjust value
9	CONTROL	Under control mode, press this button after setting state of indoor unit, control to indoor unit would be conducted by corresponding control mode.
10	GROUP	Press button under checking state to begin information check and set of grouped indoor unit, grouped information is for select control.
11	TIME	Set system time
12	SYSTEM/TEST	Begin setting of central control run mode, it is not recommended to be used by users.
13	INDOOR/DOMAIN	Shift display domain and indoor wired air condition control. **DOMAIN** corresponding to display on line communication modular, **INDOOR** corresponding to display on line indoor control.
14	CANCEL	Press this button during process of setting function to exit the already made function setting operation. Such as, if central control mode were selected, press CANCEL at this time would back to control mode selecting state.
15	CONTROL MODE	Begin control setting mode, and Central Control, Select Control and Single Control can be selected. Central Control: Control all indoor units under domain by present set state. Single Control: Control present indoor unit by present set state. Select Control: Control selected indoor unit by present set state, it also called grouped control
16	SELECT	Select required control or setting object; repress the button to the object is to cancel.
17	CONFIRM	Confirm the operated operation is effective

6.3 Display View

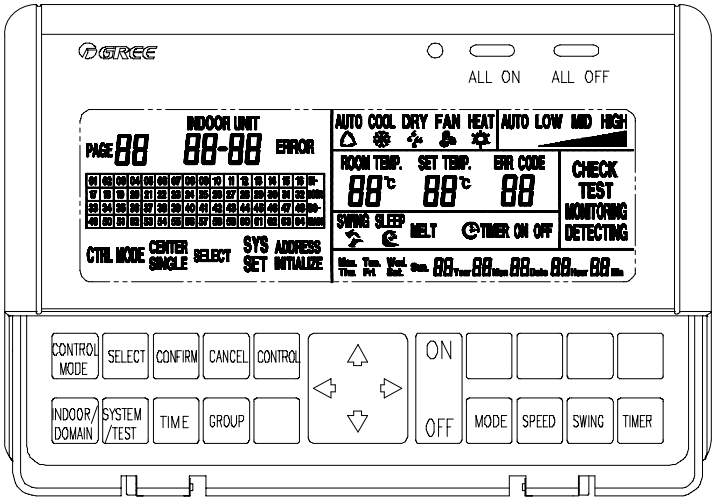

(Fig.6.3.1)

Sketch for LCD part:

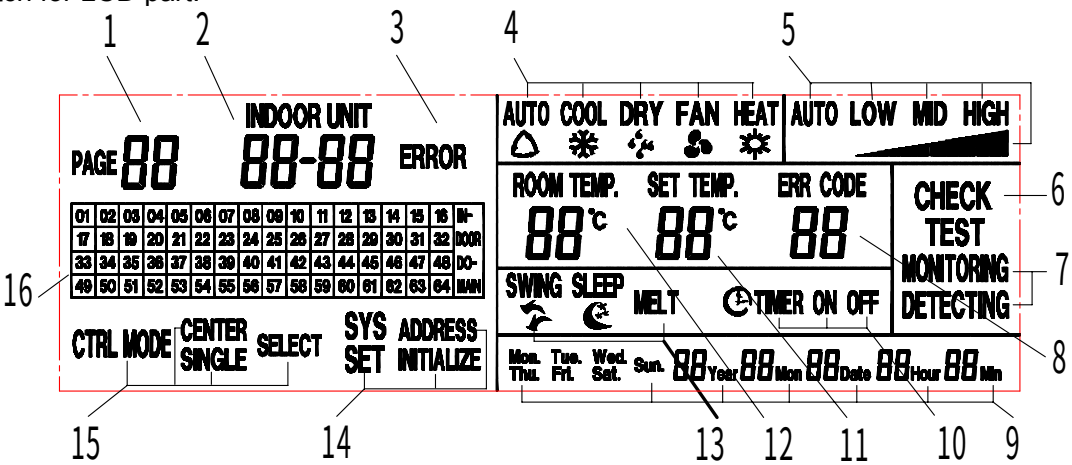

(Fig.6.3.2)

1	Pagination/displays present domain	Under select control mode, **group no.** that is present controlling is displayed; Under addresses setting state, present **Soft Add** is displayed.
2	Present unit no.	Displays the soft address of communication module that the present checking or controlling indoor unit is belonged as well as the address of indoor unit; Format: Soft add—Indoor unit add
3	Error	Displays when there is error at any indoor or outdoor unit.
4	Operation mode	Displays every operation state mode of indoor unit
5	Speed display	Displays High, Medium, Low and Auto speed of indoor unit
6	Check	Under group control mode, it is displayed when checking grouping information; Under address setting mode, it is displayed when checking hard address.
7	Operation monitoring and controlling /monitoring	When central control works in normal, operation monitoring displays; when control signal is transmitted, operation monitoring and controlling is displayed.
8	Error code	Displays when abnormal occur on operation state of present indoor unit.
9	System time	Displays present time, format is Y, M, D, H, M and week.
10	Timer setting	**Timer On/Off** on when Timer On/Off is set to present indoor unit
11	Pre-set temperature	Displays value of pre-set temperature
12	Ambient temperature	Displays value of ambient temperature of present indoor unit
13	Swing and Defrost	Displays operation of swing at indoor unit and defrost at outdoor unit

14	System setting	Setting operation mode of central control. It should be completed by installation personnel, but not for users.
15	Control mode	Displays 3 control modes of Central, Single and Select controls
16	Displays of soft address	When **Indoor** on, addresses of present online indoor unit is displayed; When **domain** on, soft address of present online communication module is displayed; Specific location of controlled indoor unit can only be ascertained when soft address fits **Project Installation List**.

Instruction to display interface:

System Setting: Including Address Setting and other functions, and it is set when installation personnel are adjusting units. It is not recommended that users operate it. The usage of this function requires password.

Address Setting: Since characters from **01** to **64** are fixed as the **addresses of controlling communication modules displayed by central control** (hereinafter called **soft addresses**), and the **addresses of communication modules themselves** (hereinafter called **hard addresses**) are value from 0~254, thus there is address matching problem between central control and controlled communication module. In order to solve this problem, **address mapping setting is required to be conducted before project adjusting!**

6.4 Communication Network Connection

6.4.1 Communication network

The following is a brief sketch of communication net of multi variable units:

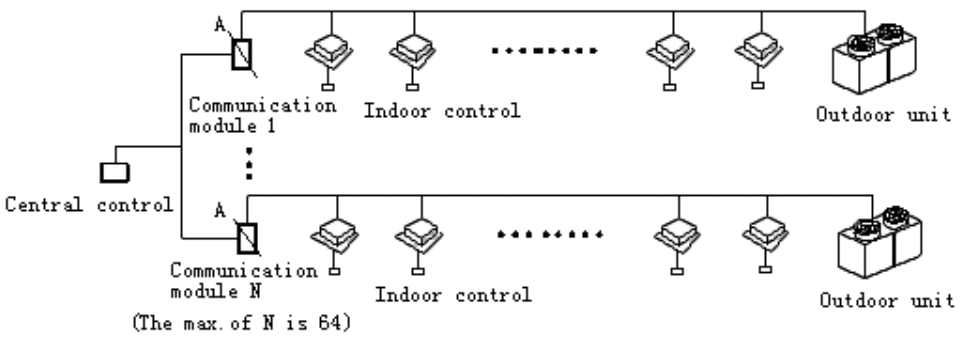

As shown in figure, the ”\” at A are parting lines for communication net. Left side of the “\” is the communication net between central control and communication module while the right side is that between multi variable outdoor unit and indoor units. The 2 nets are individual nets.

Before normal use of central control, do conduct addresses setting and adjusting to communication system by installation personnel. Only after that can the central control offered to be used by user.

6.5 Case Study

Take one floor of an office building for example to illustrate wiring and debugging of the centralized control system. In this floor, there are 2 assembly rooms, 8 offices and 1 monitor room. Refer to the following illustration for its plane structure.

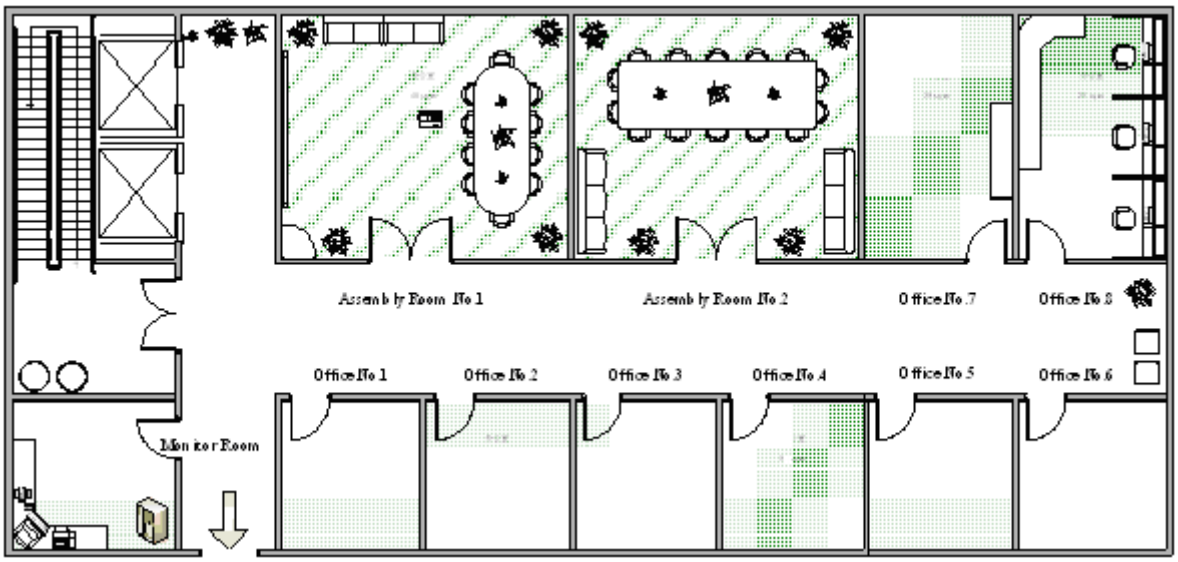

1）Instruction to Distribution of Unit and Installation of Equipment

This office building has been installed with 2 sets of GMV units, as shown in the table below.

Name	Models	Quantity of required communication modules (pinboard)	Quantity of indoor units	Corresponding rooms of indoor units		
				Room	**Address of communication module**	**Address of indoor unit**
Unit1	GMV(L)-Pd160 W/NaB-K	1（0）	12	Office 1	01	1，2
				Office 2		3，4
				Office 3		5，6
				Office 4		7，8
				Office 5		9，10
				Office 6		11，12
Unit 2	GMV-R620W4/ D	2（2）	20	**Room**	**Address of communication module**	**Address of indoor unit**
				Office 7	02	1,2
				Office 8		3,4
				Assembly room 1	03	1，2，3，4
				Assembly room 2		5，6，7，8

2）Frame Diagram of System Net

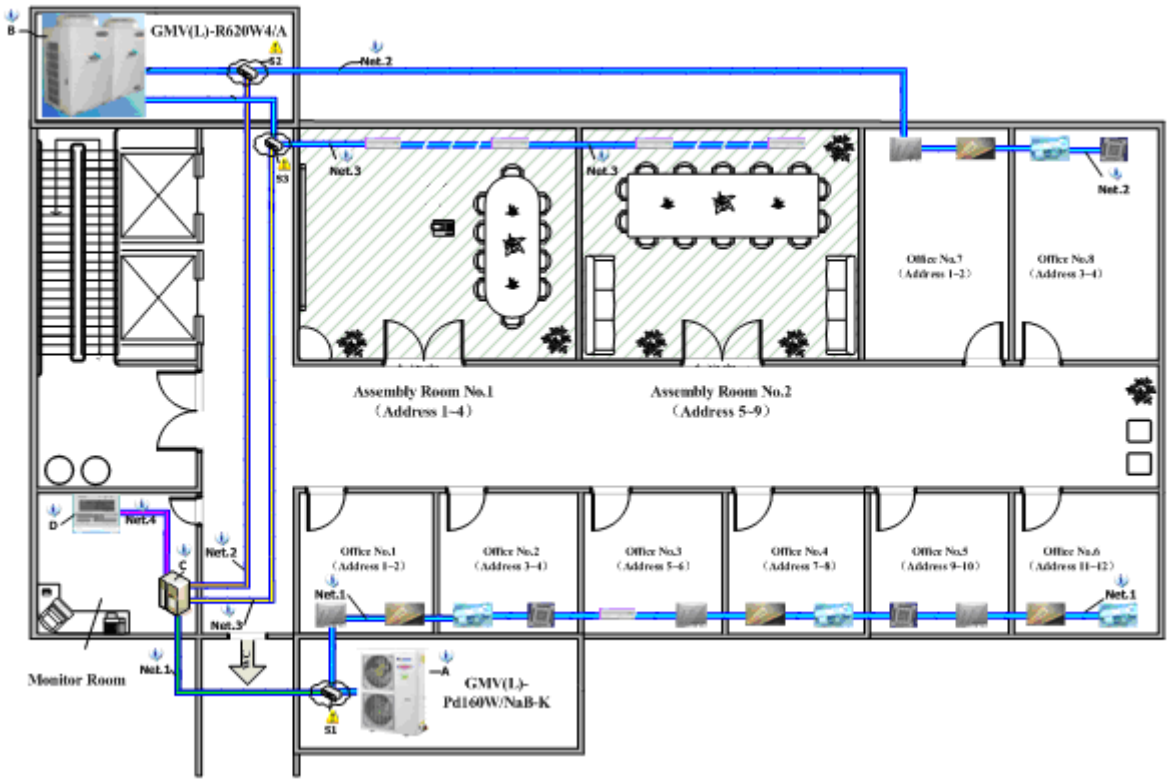

Instruction to Frame Diagram of System Net

Mark A: Outdoor Unit GMV(L)-Pd160W/NaB-K can be connected with up to 16 indoor units. In this project, this outdoor unit is connected with the communication module with address of 01 and indoor units (address 01~12） of office 1-6, corresponding with independent communication **Net.2**. The mainboard of outdoor unit is as follow:

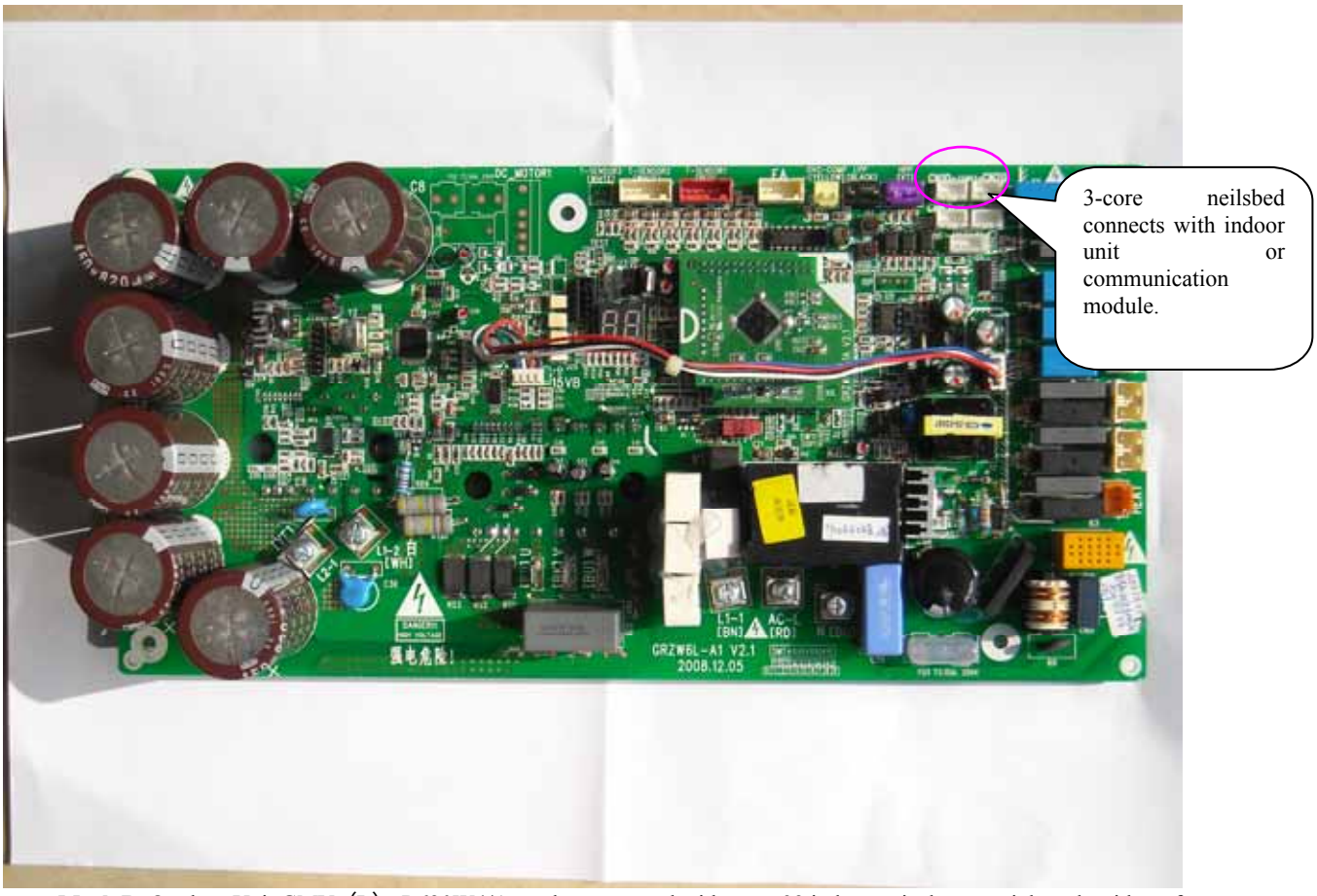

Mark B: Outdoor Unit GMV（L）-R620W4/A can be connected with up to 32 indoor units by two pinboards ,either of which can connect with up to 16 indoor units . What's more, the quantity of communication modules used is the same as that of pinboards.

In this project, pinboard 1 is connected with the communication module with address of 02 and indoor units (address 01~04） of office 7-8, corresponding with independent communication **Net.2.** Pinboard 2 is connected with communication module of address 03 and indoor units (address 01~08） of office 1-2, corresponding with independent communication **Net.3**. The outdoor figure is as follow:

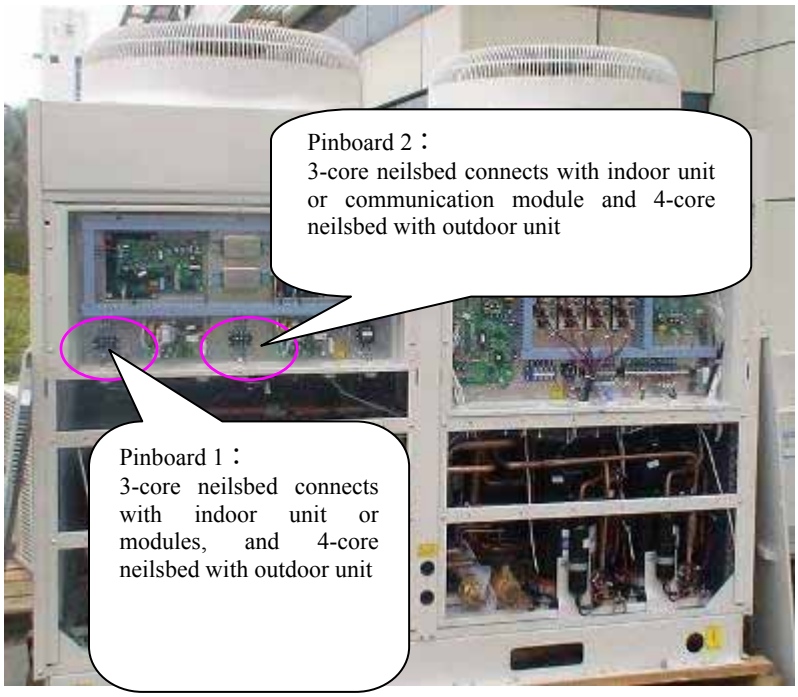

Mark C: Centralized controller cabinet is mainly used to put communication modules together. Refer to Section 3 Instruction to Installation Procedure of System about its figure and connection method of communication modules.

Mark D: Centralized Controller ZJ701. For the first use of it, address mapping setting must be made to specify addresses of communication modules which should be controlled. In this project example there are 3 communication modules with the address of 01, 02 and 03 which are displayed in the centralized controller correspondingly.

Mark S1, S2, and S3: Telephone 3-way triple adapters are used to connect communication modules with communicating net of indoor and outdoor units. Refer to Section 3 Instruction to Installation Procedure of System for its connection method.

3） Instruction to Installation Procedure of System

● Step 1: Integral Design of the Whole System.

In consideration of features of building and installation of the unit, the building is divided into a lot of monitoring regions and then confirm required systems, their quantity and installation locations. As for this example:

A. Division of monitoring regions: According to needs of the users, the whole floor is divided into 3 monitoring regions, south area (office 1-6), north area (assembly room1-2 and office 7-8) and monitor room.

B. Confirmation of quantity of systems

Name	Qty	Installation Location	Notes
Communication modules	3	Centralized control cabinet	The quantity required for the pinboards is the same as communication modules. If no pinboard, only one module is needed. So, there should be 3 modules in total.
Centralized control cabinet	1	Monitor room	Installed indoors according to user's conditions.
Centralized controller	1	Monitor room	Installed indoors

● Step 2: Wiring and Installation

A. Centralized controller as extension function of GMV unit can be installed and debugged after communication connection between outdoor unit and indoor unit and normal operation of the unit.

B. Make of centralized control cabinet

If a lot of communication modules are used, centralized control cabinet is recommended. Heavy current wires and communication lines should be wired separately. The distance between them should keep above 15cm.The following figure is an example of centralized control cabinet, but its design should be according to quantity of communication modules.

C. Connection of communication modules

COM 1 of communication module can connect with indoor and outdoor unit. The two COM2 can connect with other communication module or centralized controller. As shown in the following figure:

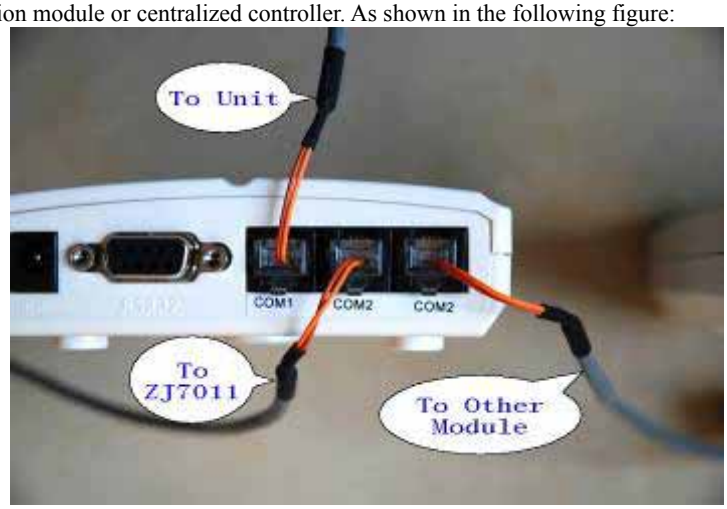

D. Connection between communication module and indoor and outdoor units

According to the net diagram, connect the communication line between indoor unit and outdoor unit. Then cut off the communication line between the mainboards of indoor unit and outdoor unit, as shown below.

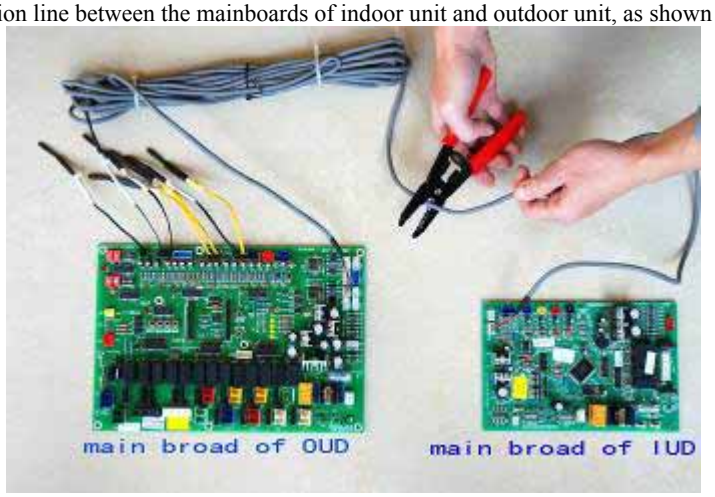

Align the cutting terminals and terminals of communication line to COM1, as shown below:

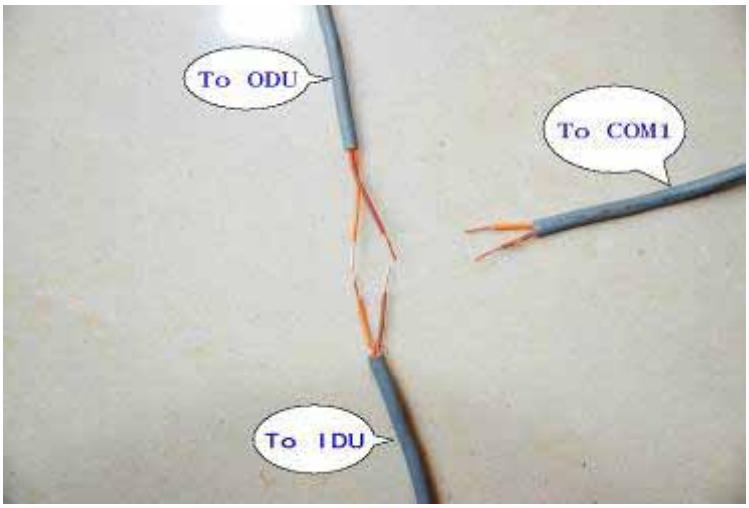

In this case, there are two methods to connection of them.

Method 1: Welding

Weld the two cutting terminals by yellow to yellow and brown to brown, as shown below:

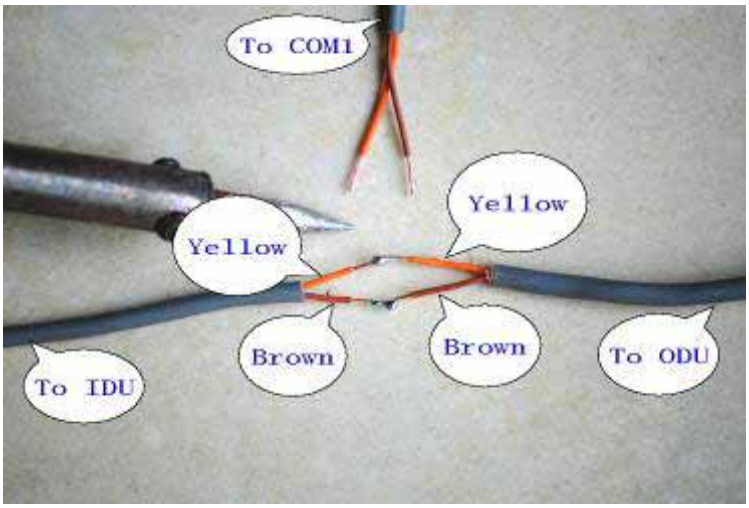

And then weld the terminals of communication line to COM1 with the welding spots in the above figure together by **yellow wire to brown wire**, as shown below:

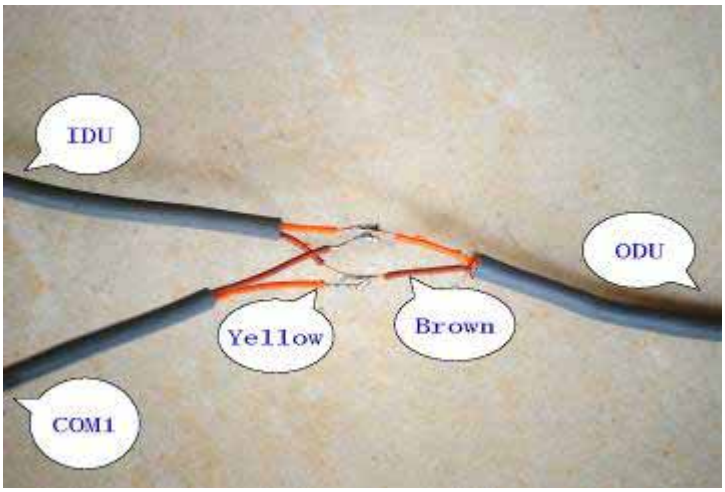

At last, wrap the welding spots with insulating tape and test conduction performance of the three communication lines, as shown below:

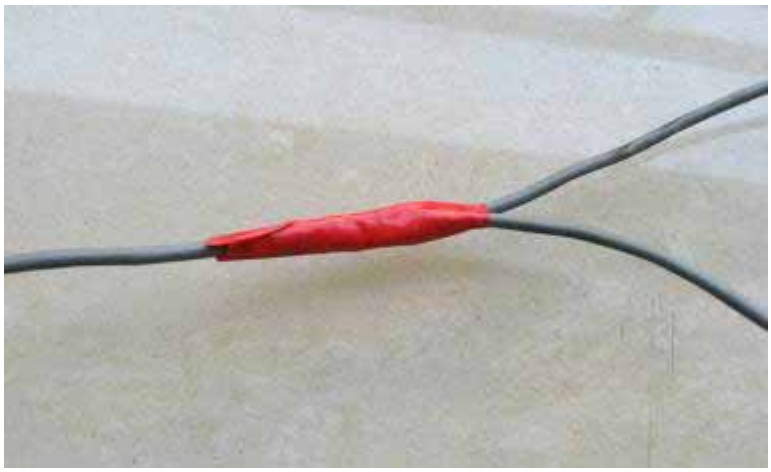

Method 2: Triple adapter

Make crystal heads for the three lines. The connection direction should be the sameas in the above welding figures, i.e. yellow to yellow and brown to brown wire of indoor and outdoor units, but yellow to brown wire of communication line to COM1.The crystal heads are as follow:

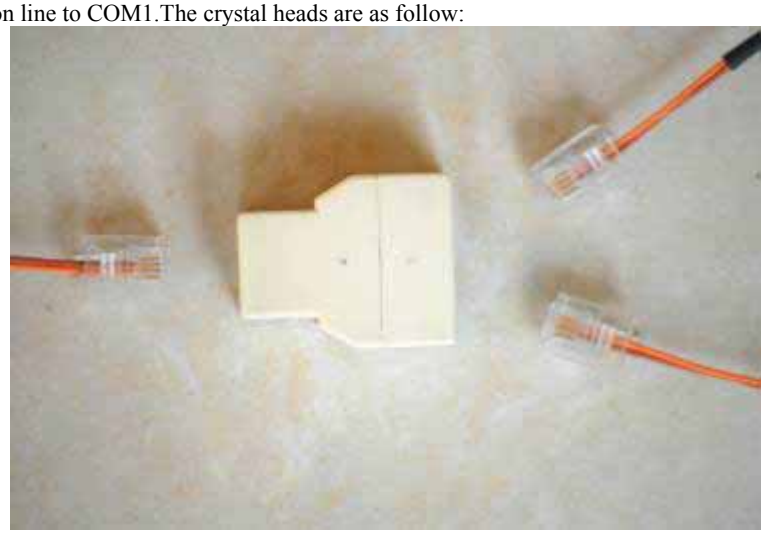

Insert the three crystal heads into the triple adopter and test conduction performance of them, as shown below:

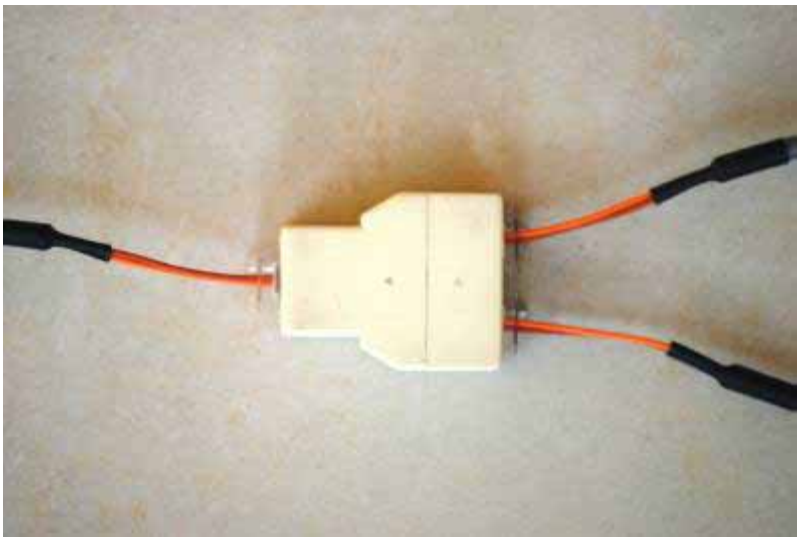

E. Connection of Communication Modules and Centralized Controller

Connection of COM1 of communication module which has 3 COM in total has been introduced as the above. COM2 can connect with another communication module or centralized controller, as shown below:

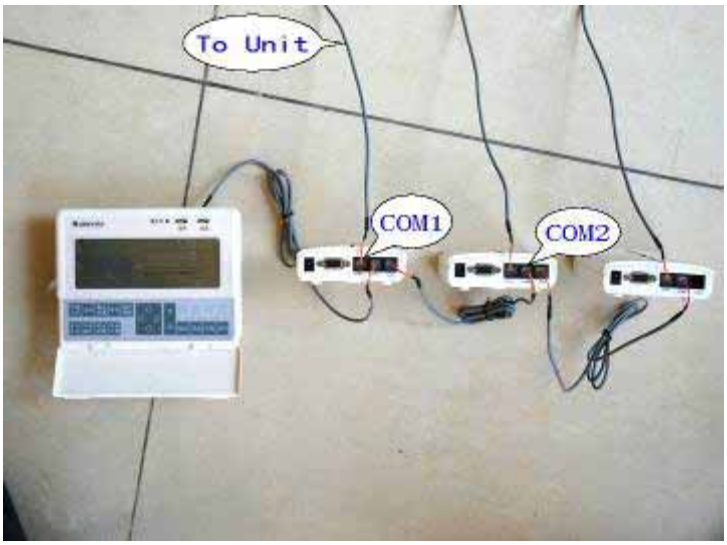

Note: The above figure is only for reference to relation among the equipments. The actual wiring is subject to the above frame diagram of system

•Step 3: There are two methods of DIP address setting of communication module

Method 1: The address of each communication module has been fixed in the factory and marked on the label at the back of it. It is unnecessary for users to set anything. In addition, the 3-digital DIP can not be dialed to OFF completely, as shown below:

Method 2: Manual setting of address, as operated the following:

1. Dial the digital switch at the back of communication module to OFF completely, as below:

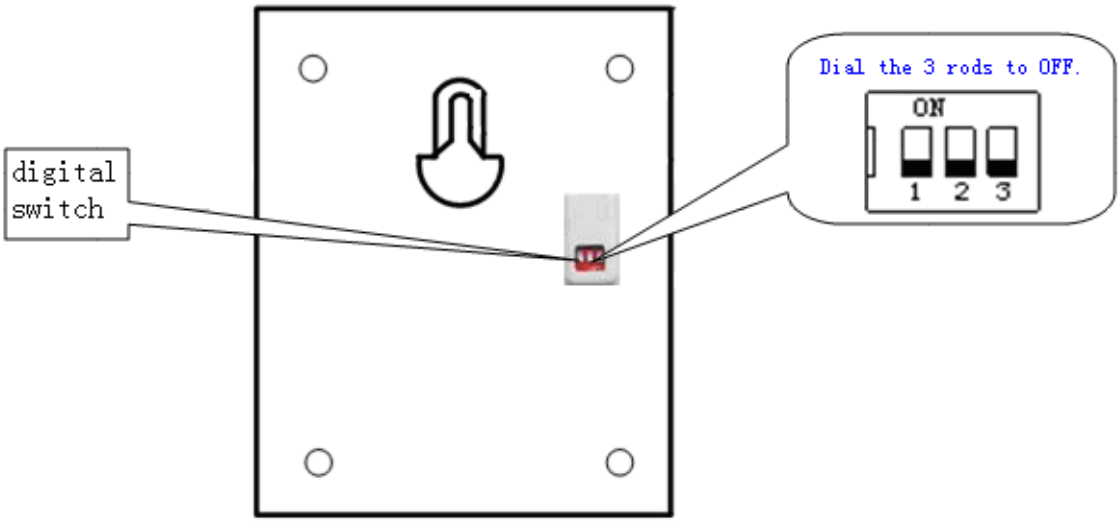

2.Open the cover of communication module as below:

The 8-digital DIP is as below:

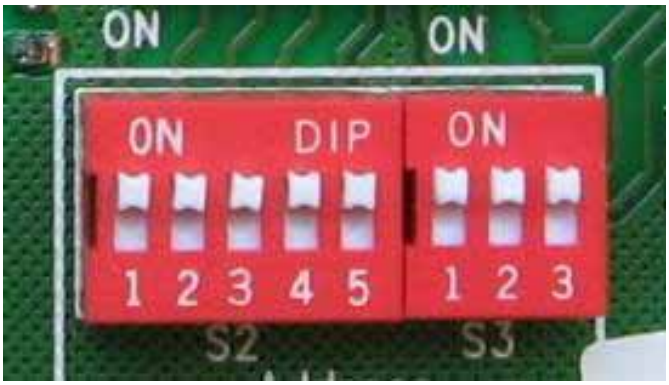

Set DIP for address according to the following table.

Address from 0 to 31								Address	Address from 32 to 63								Address
DIP S2					DIP S3				DIP S2					DIP S3			
1	**2**	**3**	**4**	**5**	**1**	**2**	**3**		**1**	**2**	**3**	**4**	**5**	**1**	**2**	**3**	
0	0	0	0	0	0	0	0	**0**	0	0	0	0	0	1	0	0	**32**
1	0	0	0	0	0	0	0	**1**	1	0	0	0	0	1	0	0	**33**
0	1	0	0	0	0	0	0	**2**	0	1	0	0	0	1	0	0	**34**
1	1	0	0	0	0	0	0	**3**	1	1	0	0	0	1	0	0	**35**
0	0	1	0	0	0	0	0	**4**	0	0	1	0	0	1	0	0	**36**
1	0	1	0	0	0	0	0	**5**	1	0	1	0	0	1	0	0	**37**
0	1	1	0	0	0	0	0	**6**	0	1	1	0	0	1	0	0	**38**
1	1	1	0	0	0	0	0	**7**	1	1	1	0	0	1	0	0	**39**
0	0	0	1	0	0	0	0	**8**	0	0	0	1	0	1	0	0	**40**
1	0	0	1	0	0	0	0	**9**	1	0	0	1	0	1	0	0	**41**
0	1	0	1	0	0	0	0	**10**	0	1	0	1	0	1	0	0	**42**
1	1	0	1	0	0	0	0	**11**	1	1	0	1	0	1	0	0	**43**
0	0	1	1	0	0	0	0	**12**	0	0	1	1	0	1	0	0	**44**

1	0	1	1	0	0	0	0	**13**	1	0	1	1	0	1	0	0	**45**
0	1	1	1	0	0	0	0	**14**	0	1	1	1	0	1	0	0	**46**
1	1	1	1	0	0	0	0	**15**	1	1	1	1	0	1	0	0	**47**
0	0	0	0	1	0	0	0	**16**	0	0	0	0	1	1	0	0	**48**
1	0	0	0	1	0	0	0	**17**	1	0	0	0	1	1	0	0	**49**
0	1	0	0	1	0	0	0	**18**	0	1	0	0	1	1	0	0	**50**
1	1	0	0	1	0	0	0	**19**	1	1	0	0	1	1	0	0	**51**
0	0	1	0	1	0	0	0	**20**	0	0	1	0	1	1	0	0	**52**
1	0	1	0	1	0	0	0	**21**	1	0	1	0	1	1	0	0	**53**
0	1	1	0	1	0	0	0	**22**	0	1	1	0	1	1	0	0	**54**
1	1	1	0	1	0	0	0	**23**	1	1	1	0	1	1	0	0	**55**
0	0	0	1	1	0	0	0	**24**	0	0	0	1	1	1	0	0	**56**
1	0	0	1	1	0	0	0	**25**	1	0	0	1	1	1	0	0	**57**
0	1	0	1	1	0	0	0	**26**	0	1	0	1	1	1	0	0	**58**
1	1	0	1	1	0	0	0	**27**	1	1	0	1	1	1	0	0	**59**
0	0	1	1	1	0	0	0	**28**	0	0	1	1	1	1	0	0	**60**
1	0	1	1	1	0	0	0	**29**	1	0	1	1	1	1	0	0	**61**
0	1	1	1	1	0	0	0	**30**	0	1	1	1	1	1	0	0	**62**
1	1	1	1	1	0	0	0	**31**	1	1	1	1	1	1	0	0	**63**

Address from 64 to 95								Address	Address from 96 to 127								Address
DIP S2					DIP S3				DIP S2					DIP S3			
1	2	3	4	5	1	2	3		1	2	3	4	5	1	2	3	
0	0	0	0	0	0	1	0	**64**	0	0	0	0	0	1	1	0	**96**
1	0	0	0	0	0	1	0	**65**	1	0	0	0	0	1	1	0	**97**
0	1	0	0	0	0	1	0	**66**	0	1	0	0	0	1	1	0	**98**
1	1	0	0	0	0	1	0	**67**	1	1	0	0	0	1	1	0	**99**
0	0	1	0	0	0	1	0	**68**	0	0	1	0	0	1	1	0	**100**
1	0	1	0	0	0	1	0	**69**	1	0	1	0	0	1	1	0	**101**
0	1	1	0	0	0	1	0	**70**	0	1	1	0	0	1	1	0	**102**
1	1	1	0	0	0	1	0	**71**	1	1	1	0	0	1	1	0	**103**
0	0	0	1	0	0	1	0	**72**	0	0	0	1	0	1	1	0	**104**
1	0	0	1	0	0	1	0	**73**	1	0	0	1	0	1	1	0	**105**
0	1	0	1	0	0	1	0	**74**	0	1	0	1	0	1	1	0	**106**
1	1	0	1	0	0	1	0	**75**	1	1	0	1	0	1	1	0	**107**
0	0	1	1	0	0	1	0	**76**	0	0	1	1	0	1	1	0	**108**
1	0	1	1	0	0	1	0	**77**	1	0	1	1	0	1	1	0	**109**
0	1	1	1	0	0	1	0	**78**	0	1	1	1	0	1	1	0	**110**
1	1	1	1	0	0	1	0	**79**	1	1	1	1	0	1	1	0	**111**
0	0	0	0	1	0	1	0	**80**	0	0	0	0	1	1	1	0	**112**
1	0	0	0	1	0	1	0	**81**	1	0	0	0	1	1	1	0	**113**
0	1	0	0	1	0	1	0	**82**	0	1	0	0	1	1	1	0	**114**
1	1	0	0	1	0	1	0	**83**	1	1	0	0	1	1	1	0	**115**
0	0	1	0	1	0	1	0	**84**	0	0	1	0	1	1	1	0	**116**
1	0	1	0	1	0	1	0	**85**	1	0	1	0	1	1	1	0	**117**
0	1	1	0	1	0	1	0	**86**	0	1	1	0	1	1	1	0	**118**
1	1	1	0	1	0	1	0	**87**	1	1	1	0	1	1	1	0	**119**
0	0	0	1	1	0	1	0	**88**	0	0	0	1	1	1	1	0	**120**
1	0	0	1	1	0	1	0	**89**	1	0	0	1	1	1	1	0	**121**
0	1	0	1	1	0	1	0	**90**	0	1	0	1	1	1	1	0	**122**
1	1	0	1	1	0	1	0	**91**	1	1	0	1	1	1	1	0	**123**
0	0	1	1	1	0	1	0	**92**	0	0	1	1	1	1	1	0	**124**
1	0	1	1	1	0	1	0	**93**	1	0	1	1	1	1	1	0	**125**
0	1	1	1	1	0	1	0	**94**	0	1	1	1	1	1	1	0	**126**
1	1	1	1	1	0	1	0	**95**	1	1	1	1	1	1	1	0	**127**

● Step 4: System Setting of Centralized Controller

SYSTEM SETTING includes **ADDRESS SETTING** and **INITIALIZE SETTING.** The former one is used for setting address of control object (communication module), and the latter one for initializing the data in the centralized controller （including clear all the finished address settings）.

Since the centralized controller can control at most 64 communication modules and the address of them is 0 to 253 (0 is generally unused), it must specify the address of communication module needed to be controlled. It is **ADDRESS SETTING**, which is not recommended to operate by users.

The debugging personnel can press **SYSTEM/DEBUG** into system setting interface. After pressing **UP**, **DOWN**, **LEFT** and **RIGHT** buttons, press **CONFIRM** button into the interface for selection between **ADDRESS SETTING** and **INITIALIZE SETTING**.

The operation procedure of **ADDRESS SETTING**:

1. The centralized controller without energizing and setting will display following.

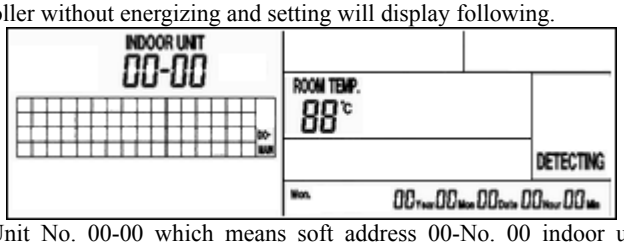

Display Present Unit No. 00-00 which means soft address 00-No. 00 indoor unit. (Soft address is the No. displayed in 1-64 grid of LCD.

Press **SYSTEM/DEBUG** into system setting interface. After pressing **UP**, **DOWN**, **LEFT** and **RIGHT** buttons, press **CONFIRM** button into the interface for selection between **ADDRESS SETTING** and **INITIALIZE SETTING**. Then press UP or DOWN button to switch between them.

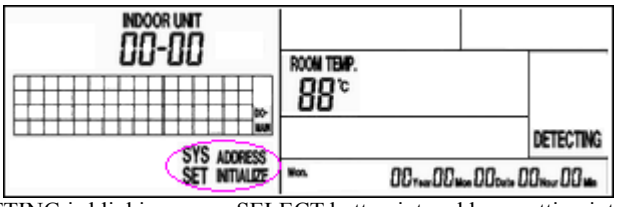

2. When ADDRESS SETTING is blinking, press SELECT button into address setting interface.

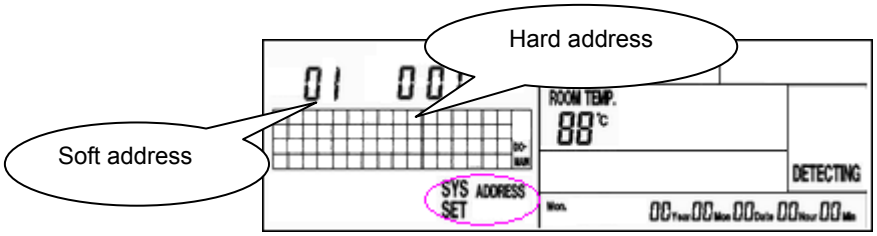

Press **LEFT** or **RIGHT** button to switch between SOFT and Hard ADDRESS settings, and **UP** or **Down** button to adjust their values。 After adjustment, press **CONFIRM** button to make the address values corresponding and effective. If the cursor stops at hard address position (hard address is blinking), press **CANCEL** button to make the setting value ineffective, in which case, the "- -"will be displayed.(Soft address is the No. displayed in 1-64 grid of LCD and hard address is the actual one of communication module.)

In this example, the centralized controller controls 3 communication modules with the address of 01, 02 and 03 (i.e. hard address is 01,02 and 03).For convenient management, soft address will be set to the same as hard address, i.e. "01 001","02 002"and "03 003".

If communication is normal after setting, the centralized controller will display as the following figure:

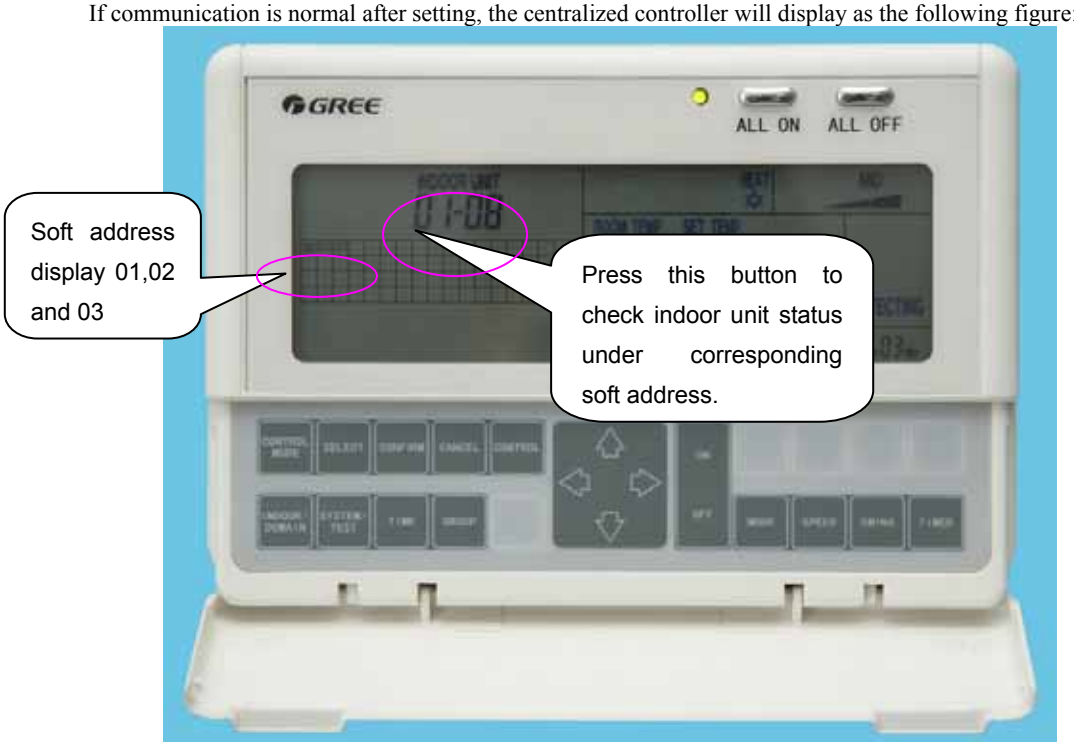

I. 01,02 and 03 of soft address is displayed, which indicates normal communication of these 3 communication modules.

II. PRESENT UNIT NO. displays "01-08", which indicates No. 08 indoor unit under 01 communication module is being checked.

III. Press ROOM/REGION button to check other indoor units' status under present communication module. Indoor units' status is automatically detected, without setting in centralized controller.

● Step 5: Troubleshooting during Installation of Centralized Controller

Generally speaking, **connection of communication lines**, a**ddress DIP of communication module** and a**ddress mapping setting of centralized controller** are the common problems during installation of centralized controller. These problems can be reflected from running indicator (green) of communication module. Meanwhile, it is recommended to debug the centralized controller after making communication of outdoor and indoor units smooth to simplify the problems.

A. Connection of communication lines

① If incorrect or non-connection of communication module, centralized controller and communication line of indoor and outdoor units, the green indicator will be black all the time.
② It indicates connection problem between communication module and centralized controller that green indicator blinks once every 2s.In this case, COM2 must be used to connect them.
③ It indicates connection problem of communication module and indoor and outdoor units that green indicator blinks twice every 2s. In this case, COM1 must be used to connect them. Refer to Step 2, C for details.

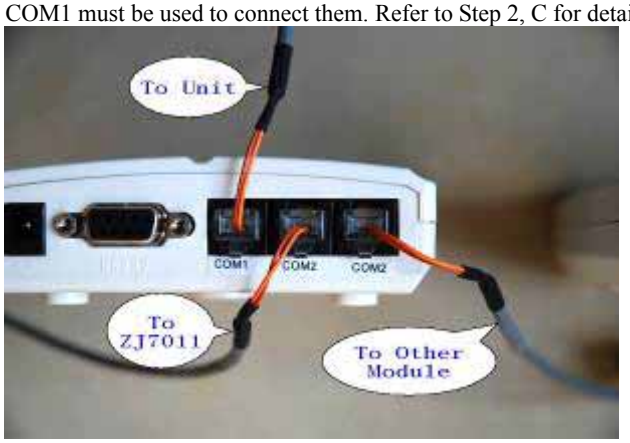

B. Address DIP of communication module

There are two methods for address setting. The one is that communication module has been set by software store, but the 3-digital DIP switch can not be dialed to OFF completely. The other one is to set it manually, but the 3-digital DIP switch should be dialed to OFF completely. Refer to step 3 for details.

C. Address mapping setting of centralized controller

The centralized controller only can normally operate after specifying address of communication module needed to control. If not, the operation status of communication and indoor units can not be displayed by it. Refer to Step 4 for details.

7 MONITORING SOFTWARE

7.1 Function

As the development and improvement of manufacturing technology and in order to solve the problems of complex distribution of the central AC in the buildings and difficult control and maintenance of them, an platform easy and reliable to operate must be provided to the users for daily management and maintenance. So this long-distance monitoring system combining electronic communication and computer technologies is developed to collect the running state of the units and to monitor and control the units from a long distance. Its structure is as follow:

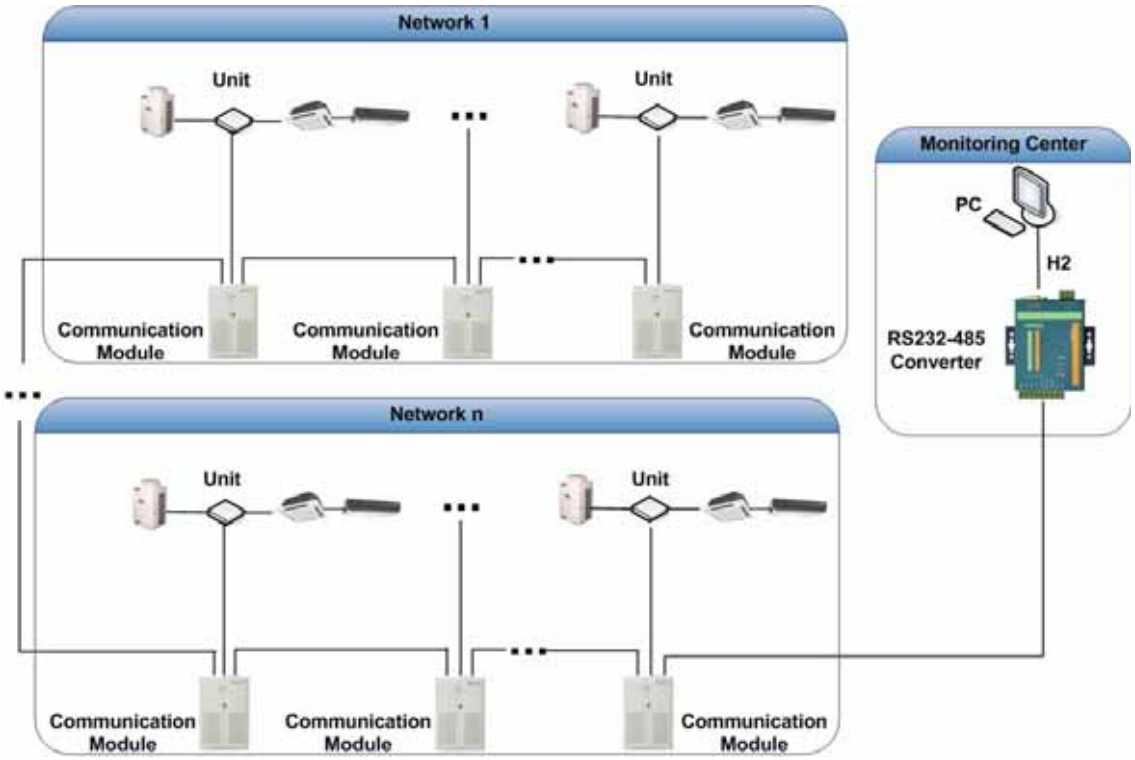

7.2 Connection Between the Computer and the Unit

1. Notice：

- The address code of the communication modules should not be conflicted in one project.
- Optoelectronic Isolated Repeater: One every 800m of communication distance equipped with one and one every 30 communication modules equipped with one.

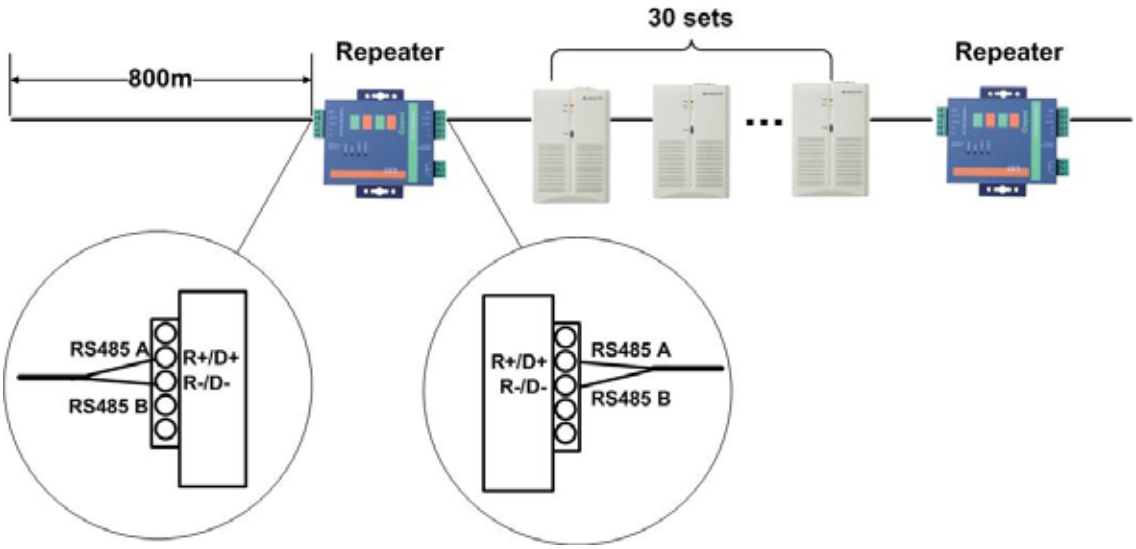

- the communication cable and heavy-current wire should be separated and the distance between them can not be below 15cm
- line A and line B of Bus 485 should respectively correspond with line A and line B.

- crystal head（crystal head buckle is downwards）

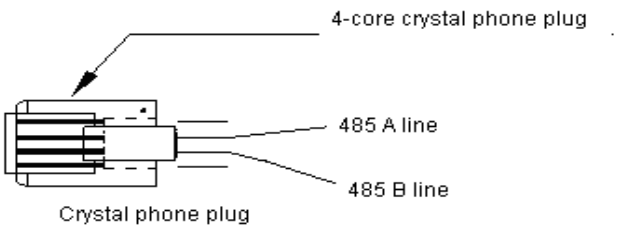

2. Wiring Diagram

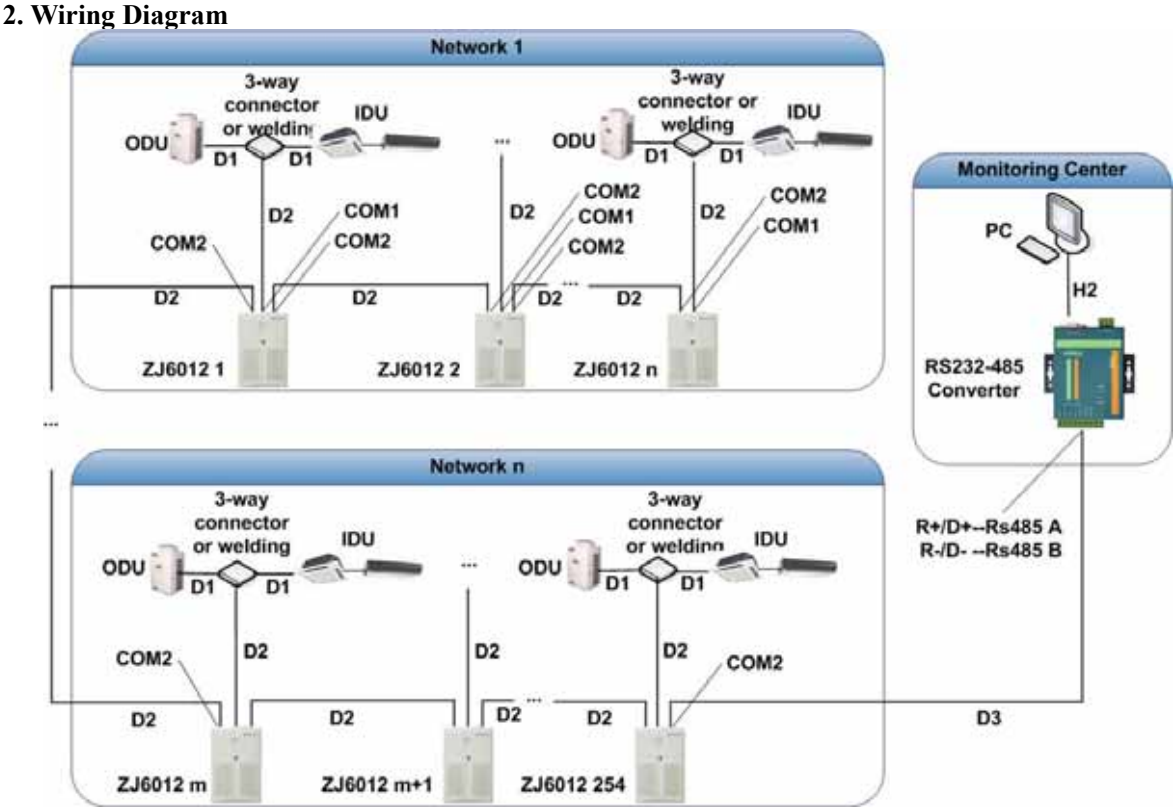

Description of above communication cables

Cable	Description
D1	crystal head and the other end is XH 4-core pin connector（2-core Type-V twisted pair wire）
D2	both crystal head(Standard parts)
D3	crystal head and the other end connects of it connects with wiring terminal of converter.（2-core Type-V twisted pair wire）
H2	both 9-core head (Standard parts)

7.3 Hardware

1. Introduction to Main Devices

1.1 R232-R485 Optoelectronic Isolated Converter (standard parts)

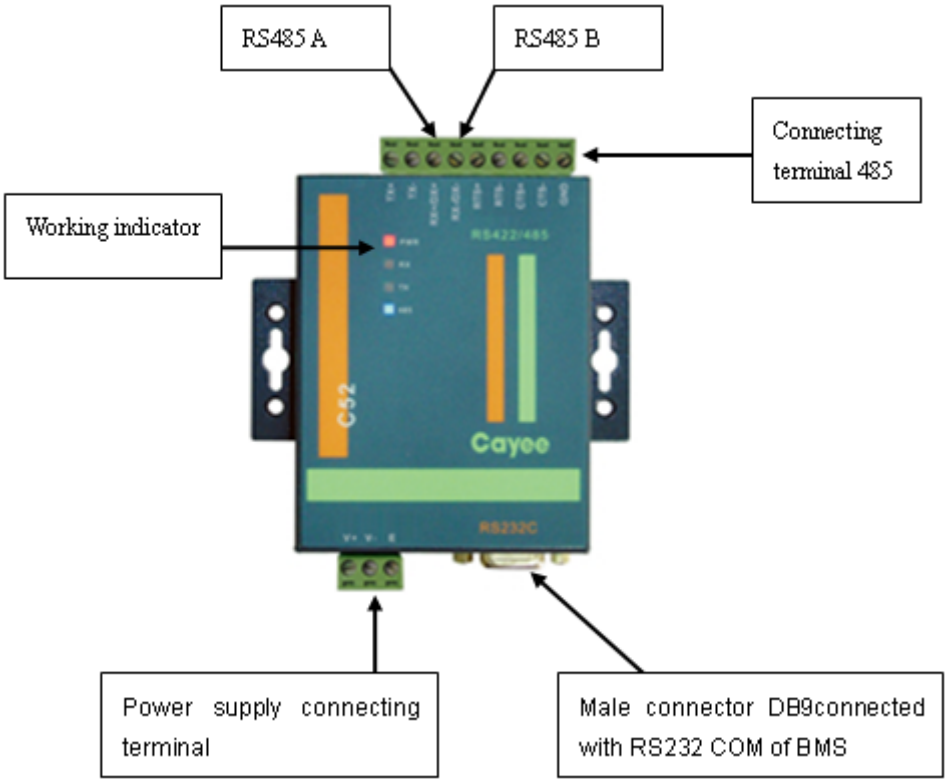

1）Function Introduction:

- R232-R485 optoelectronic Isolated converter is used to convert the signal 232 of PC COM and signal of bus 485.

2）Dimension

Description	L（mm）	W（mm）	H（mm）
optoelectronic isolated converter	94	72	23

3）Installation Dimension

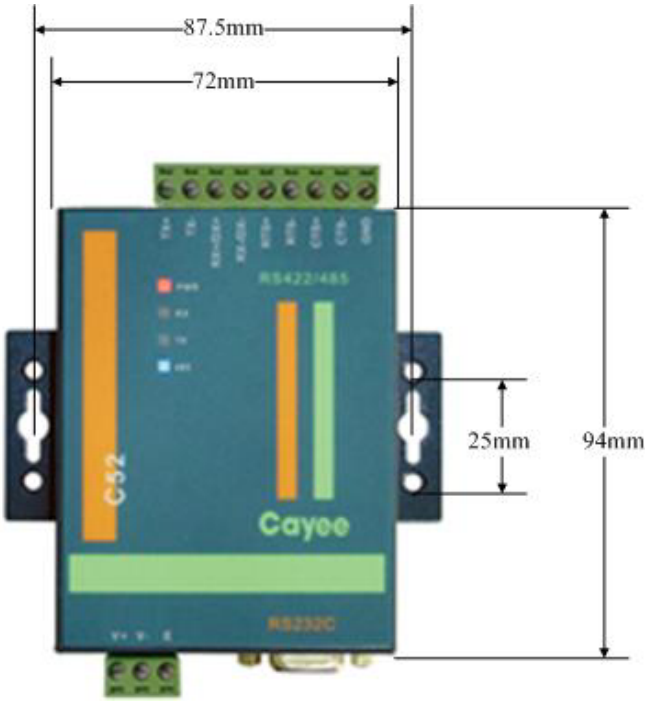

4）Installation Criteria:

- It must be installed indoors to avoid knock, insolation or rainwater and is better to be put in the monitoring room.
- This device must be the original one in the factory. Never self-buy the models for replacement.
- 220-V AC socket must be installed for independent power supply.
- Power supply specification: 12～30VDC 800mA

1.2 Optoelectronic Isolated Repeater(optional parts)

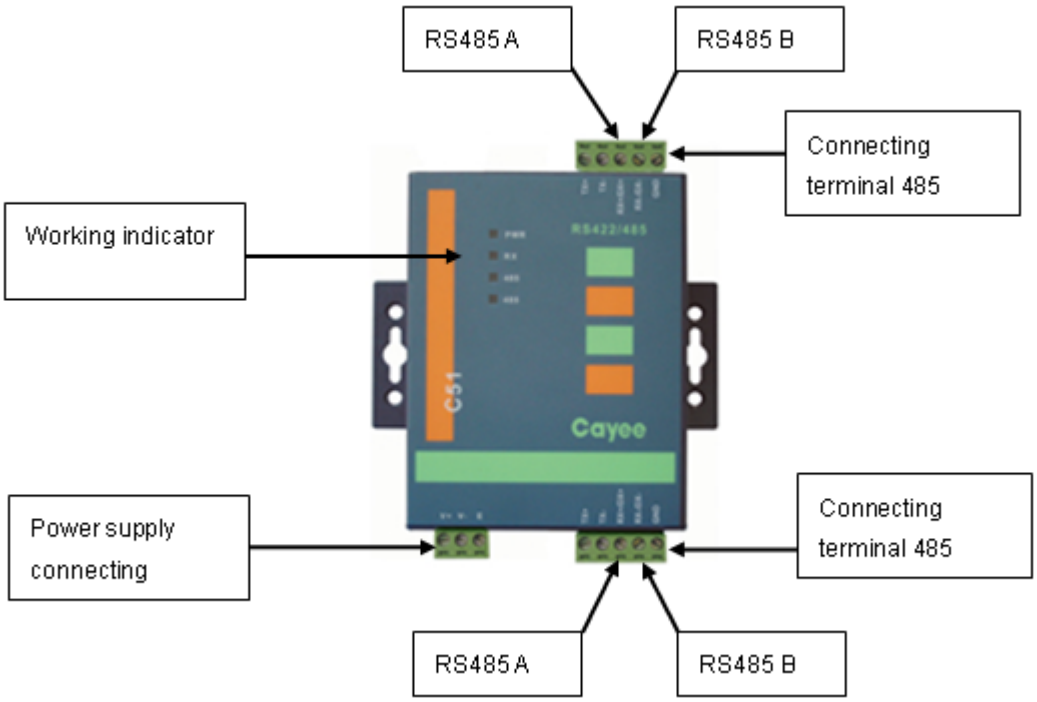

1）Function Introduction:

- Optoelectronic Isolated repeater is mainly used to collect increase of communication distance and nodes when the quantity of communication modules is above 30 or communication distance is above 800m.Refer to Project and Installation section for details.
- 2）Dimension

Description	L（mm）	W（mm）	H（mm）
Optoelectronic Isolated Repeater	94	72	23

3）Installation Dimension

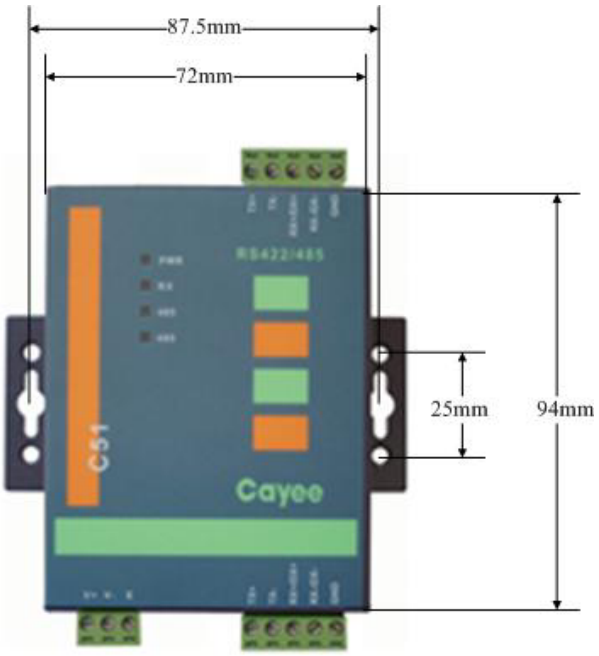

4) Installation Criteria:

- It must be installed indoors to avoid knock, insolation or rainwater and is better to be put in centralized control cabinet
- This device must be the original one in the factory. Never self-buy the models for replacement.
- 220-V AC socket must be installed for independent power supply.
- 12～30VDC 800mA Power supply specification: 12～30VDC 800mA

1.3 Communication Module (standard parts)

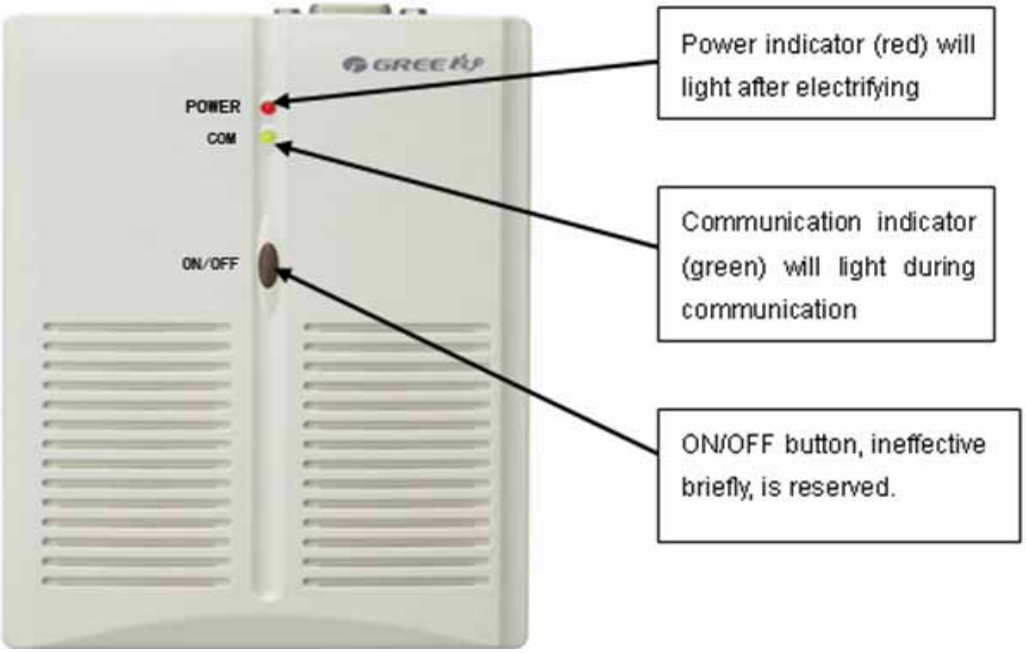

1) Function Introduction

- Communication module is used for conversion and transfer of signal of PC and air conditioner during the communication of them, making the role of communication controller. Refer to User Instruction to Communication Module for details.

2) Dimension:

Description	L (mm)	W (mm)	H (mm)
Communication module	150	102	30

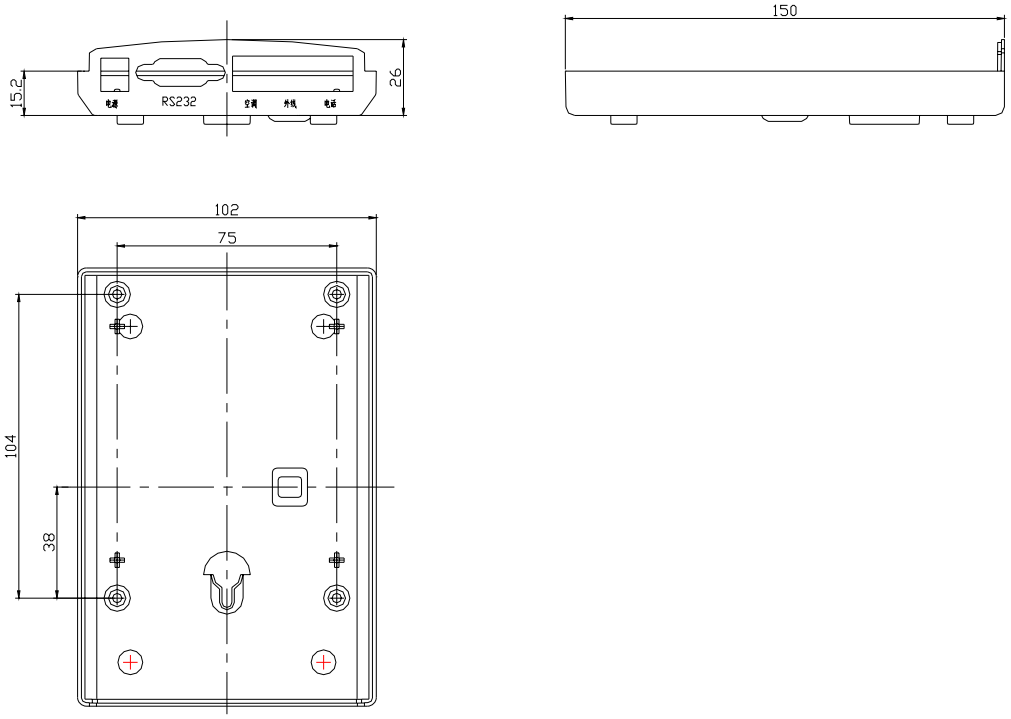

3）Installation Dimension:

Description	Distance to top side（mm）	Diameter（mm）
Hanging Hole	35	5

4）Use Instruction to Communication Module

- The Sketch Map of COM, as shown below:

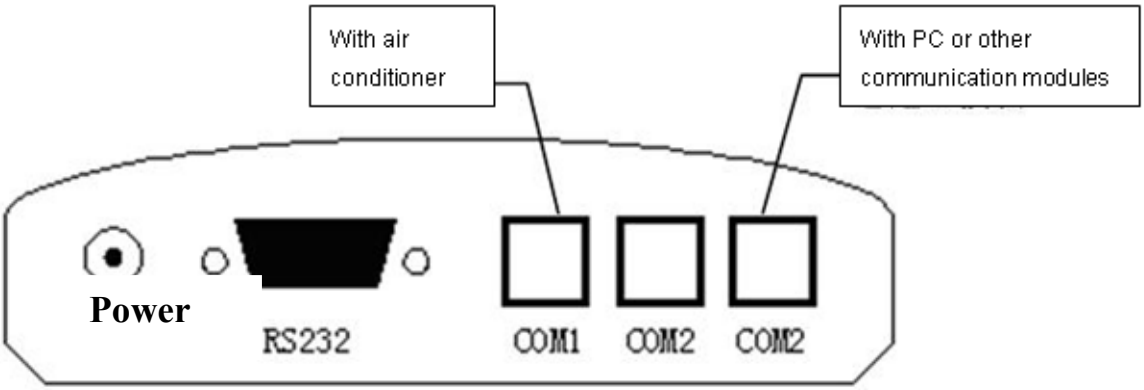

- Use Instruction

Please check the user manual of communication module for details information.

5）Installation Criteria of Communication Module:

- Ensure the specification of power adapter to avoid malfunction or damage to the communication module.
- Ensure unique DIP address of each communication module in the project to avoid malfunction.
- Ensure communication cable connects with correct COM to avoid malfunction.
- The communication modules should be put in centralized control cabinet together to avoid direct sunlight or high temperature and wet environment.
- Power transformer specification: input AC200V～50HZ and output DC9V～800mA

1.4 Centralized Control Cabinet (user provided parts)

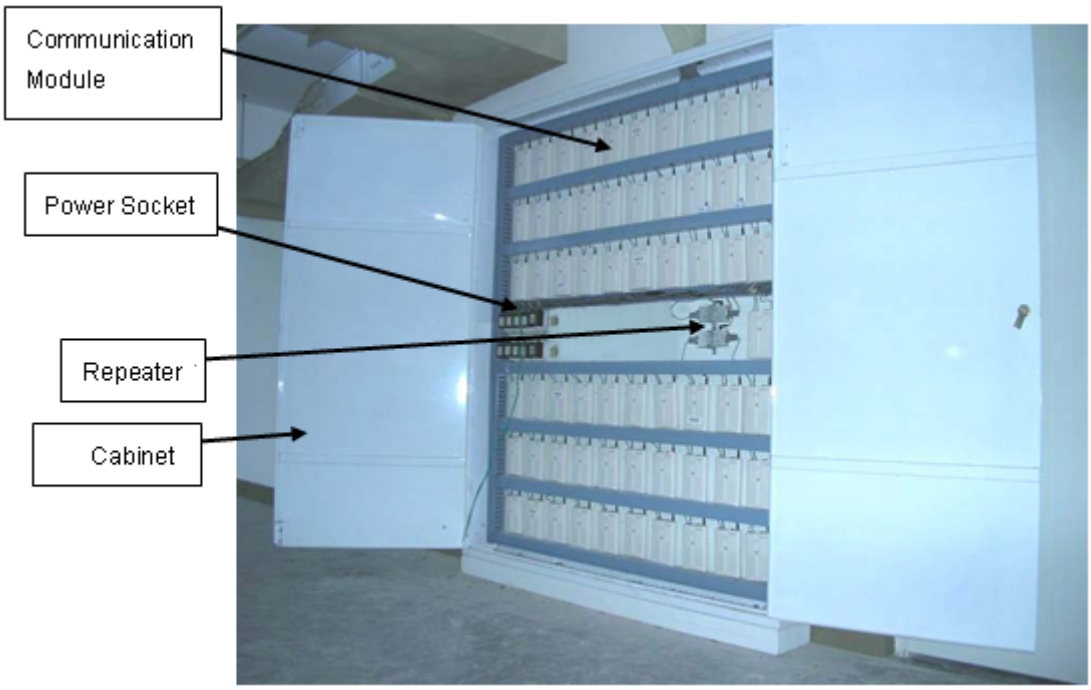

1) Function Instruction:

- It can put the communication modules together for convenient centralized management and reliable operation.

2) Dimension:

- The following dimension is for reference. The cabinet is designed according to 10 communication modules into. If more modules are needed, the cabinet should be designed once again. The internal structure should accord to actual state.

The external dimension of the cabinet (Unit: mm)

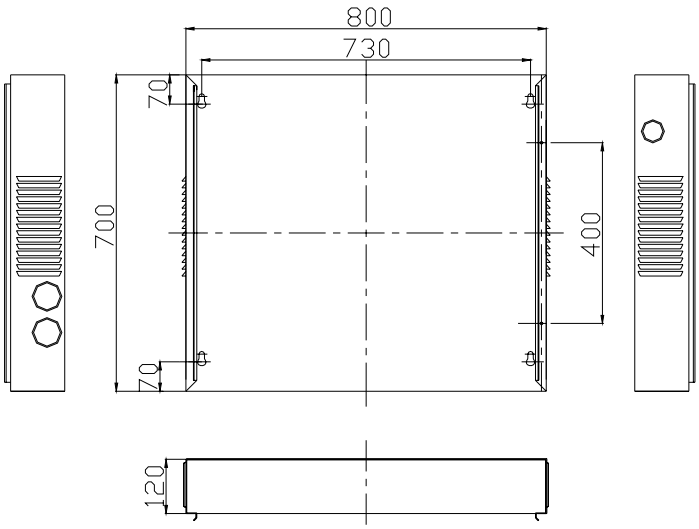

3) Installation Criteria:

- The dimension of the cabinet should be designed according to quantity , arrangement and put position of the communication modules before make of it.
- Independent power supply for each communication module is needed, so enough 220v AC sockets should be installed in the cabinet.
- The communication cable and heavy-current wire should be separated for the distance above 15cm.
- The cabinet should be put indoors and locked to avoid insolation and rainwater or contact of non-manager.

1.5 3-way Phone Connector (user provided parts)

Note: Lines without 3-way telephone connector can be connected by welding and protected with insulating tape to avoid oxidization and short circuit.

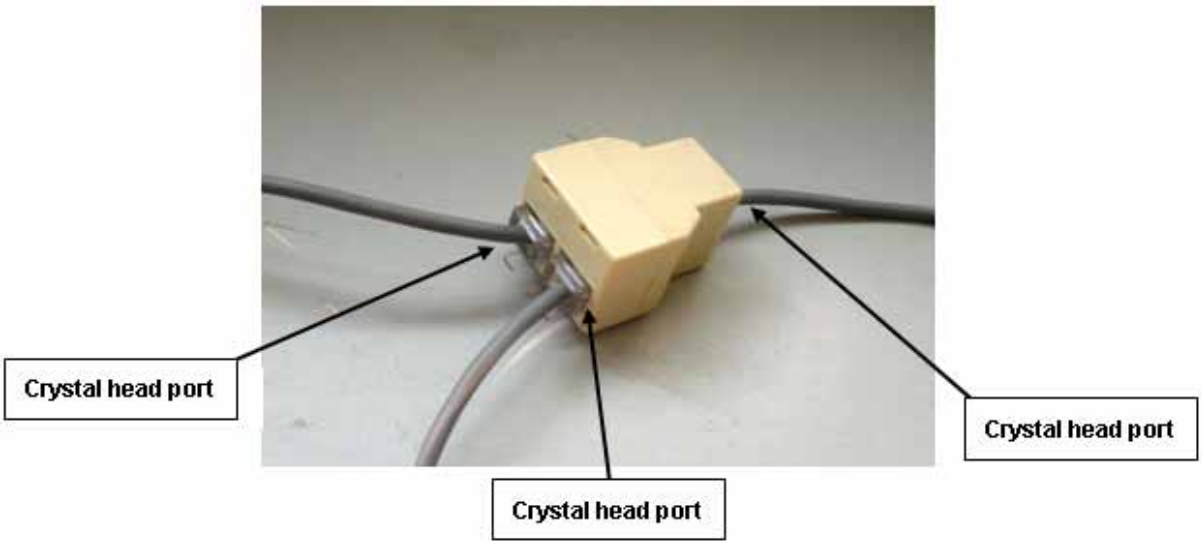

1) Function Instruction: Common 3-way phone connector is applied to connect 3 pieces of communication cable.
Dimension ：

Description	L（mm）	W（mm）	H（mm）
3-way connector	33	27	21

2) Installation Criteria:

- Avoid knock, insolation or rainwater.
- Ensure tightness of each bayonet without load.
- Perform conduction test after installation. Replace the ones of poor contact.
- The welding method is better than 3-way connector.
- After the connection of communication cables with 3-way connector, it must be fixed by insulating tape to avoid loose and poor contact of crystal head.

INSTALLATION

INSTALLATION

1 PRECAUTIONS FOR INSTALLATION

1.1 Precautions for installation

Before installation, please ensure if the installing site, power ratings, possible operating range (pipe distance, height difference between indoor and outdoor unit, power voltage) and installing space are correct and suitable. The outdoor unit is general to all models according to its power.

- To ensure correct installation, please make sure to read the Safety Considerations thoroughly before starting the installation works.
- The considerations stated below are classified into ⚠WARNING and ⚠CAUTION. Those that might cause death or severe injury in case of wrong installation are identified in ⚠WARNING. However, those that are stated in ⚠CAUTION may also cause severe accidents sometimes. Therefore, both of them relate to important safety considerations and must be strictly followed.
- After completing the installation and test run and confirming that all are normal, please introduce to the client on how to use and repair the machine according to the Operating Instructions. Besides, please deliver the considerations herein to the clients together with the Operating Instructions, and ask them to keep properly.

⚠ WARNING!

- The installation shall be performed by the vendor or professional dealer from which you buy the machine. If you install by yourself, any improper installation might cause water leakage, electric shock or fire accident.
- The installation shall be done correctly according to installation instructions. Improper installation may cause water leakage, electric shock or fire.
- To install a large air-conditioning system in a small room, please make sure to take measures to prevent that the refrigerant will not exceed the limit concentration in case of leakage. For the measures to prevent the refrigerant from exceeding the limit concentration, please consult your dealer. If no proper measures, it might cause human suffocation in case of refrigerant leakage.
- Please install at a position that is strong enough to support the weight of machine. If the installing position is of low strength, the machine may drop down and thus cause human injury.
- Please carry out installation in accordance with the rules for preventing the typhoon or earthquake. The machine may tip over if the installation does not comply with the requirements.
- The electrical cabling shall be carried out by qualified electricians in accordance with the Safety Code for Electrical Equipment, relevant local rules and the installation instructions. Make sure to use the special-purpose circuit. If the power circuit capacity is low or the construction is improper, it might cause electric shock or fire accidents.
- Please use suitable cables and connect them securely. Please fix the terminal joints securely. The terminal connection shall not be affected due to any external force applied onto the cable. Improper connection and fixing may cause heating and fire accidents.
- Keep the cables in correct shape and prevent them from protruding upward. Please protect them securely with repair board. Improper installation may cause heating and fire accidents.
- When erecting or relocating the air conditioner, do not let any air enter into cooling circulation system except the specified refrigerant. If any air is mixed, abnormal high pressure will occur in the cooling circulation system, thus causing crack or human injury accidents.
- During installation, please always use the attached parts or designated parts. Failure to use the designated parts may cause water leakage, electric shock, fire or refrigerant leakage.

⚠ CAUTION:

- Please earth securely. Do not connect the earth wires to gas pipe, water pipe, lightning rod or telephone line. Improper earthling might cause electric shock.
- Leakage circuit breaker must be installed at some place. No installation of leakage circuit breaker might cause electric shock.
- Do not install at a place where inflammable gas might leak. Gas leakage and despot around the machine might cause fire accidents.
- To ensure correct drainage of water, the drainage hose shall be installed according to the installation instructions. Also the heat insulation shall be provided to avoid condensing.Improper installation of the pipe might result in water leakage and lead to possible wetting of the articles in the room.

1.2 Key Points of Installation

Installation Procedures			Description and Acceptance Criteria
Material Selection and Equipment Inspection			1. The materials specified on the engineering drawing shall be purchased as specified (e.g. copper tube, thermal insulation tube, PVC pipe, power cables, air switch, etc); **2.** The materials not specified on the engineering drawing shall be purchased according to the actual quantity of works (e.g. hanger frame, cable duct, etc); **3.** Check if the outdoor unit, indoor unit, communication wires and accessories are complete.
Installation of indoor unit	Communication wire	Connection	1. The power cables shall be separated from communication wires at a least distance of 10cm. 2. To avoid breaking the communication wires, please do not use strong force. 3. For multiple units, please mark them properly. Switch on indoor and outdoor unit, and ensure there is no display of “Communication Wire Error E6”
		Address dial code	1. Each indoor unit under the same system has a unique address dial code. 2. The wired controller and its corresponding indoor unit have the same address dial code.
	Remote Control		1. Select the remote control mode; 2. The centralized controller and communication module shall be installed free from the source of interference.
	Power cord		1. The power cable must meet the specifications. 2. The indoor units under the same system must be arranged under unified power supply.
	Drainage hose	Installation	1. The PVC pipes must meet the specifications. 2. A specific gradient must be provided along the water flow direction. 3. Carry out water detection after installation. Carry out thermal insulation to the drainage hose only after the water detection is accepted.
		Thermal insulation	1. The thermal insulation tube must meet the specifications. 2. Seal between the thermal insulation pipes to avoid air entry.
	Installation of Air Duct (when with high static pressure duct-type unit)		1. Design the length of air duct according to static pressure; 2. The return air inlet shall be optimally designed to avoid too small size.
Installation of connection pipes	Welding		1. The copper tube must meet the specifications. 2. Ensure it is dry and clean inside the tube. 3. Make sure to charge nitrogen as required for protection when welding the tubes. 4. Please keep to the welding process and ensure the

		system free of leakage. 5. Add a dual-way filter on liquid pipe side. 6. For multiple systems, please mark them properly. Carry out leakage detection under pressure after welding.
	Purge and make leakage detection under pressure	1. Purge the system clean. 2. Keep the pressure for 24 hours Except for the influence by temperature, it is deemed acceptable if pressure drop is within 0.02MPa. (With the temperature change by 1?, the pressure will change by approx. 0.01MPa).
	Thermal insulation	1. The thermal insulation tube must meet the specifications. 2. Seal between the thermal insulation pipes to avoid air entry.
Installation of outdoor unit		1. Select the installing position correctly. 2. Build the foundation according to the anchor bolt position and the dimension of outdoor unit; 3. Build the damping device properly. 4. Avoid sharp knock when handling the outdoor unit. The inclination angle shall not be higher than 15°
Connection of indoor unit and outdoor unit		1. Tighten the nuts; 2. Provide proper protection to the outdoor connection pipe, communication wires and power supply.
Leakage detection under pressure		Keep the pressure for 24 hours. Except for the influence by temperature, it is deemed acceptable if pressure drop is within 0.02MPa. (With the temperature change by 1°C, the pressure will change by approx. 0.01MPa).
Vacuuming		1. Establish vacuum simultaneously in the gas pipe and liquid pipe; 2. The vacuuming time shall be long enough. Put still for 1 hour after vacuuming. It is deemed acceptable if the pressure will not rise.
Add refrigerant		Add refrigerant according to the volume as specified on the engineering drawing.
Open the valve of outdoor unit		
Commissioning of complete unit		

Remarks:

1) Described above are general working procedures. The procedures might vary with the site conditions.

2) For detailed installation rules, please see the description in each chapter.

2 FLOW CHART OF INSTALLATION

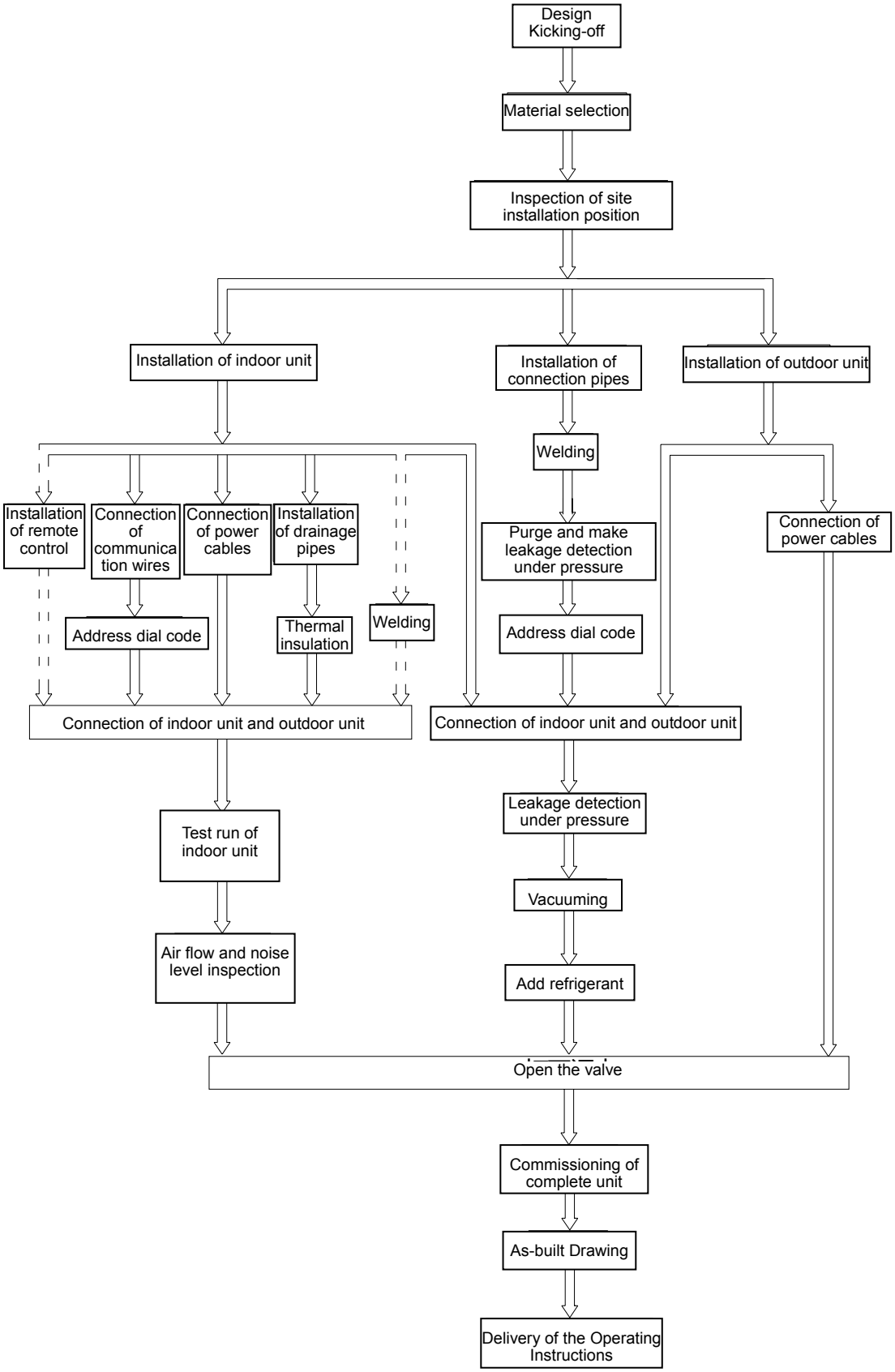

3 INSTALLATION OF OUTDOOR UNIT

3.1 Cautions for installation of side discharge outdoor unit

To ensure good operation of the air conditioner, the selection of installing position must be in accordance with the following principles:

- The outdoor unit shall be so installed that the air discharged out of the outdoor unit will not flow back and that enough space shall be maintained around the machine for repair.
- The installing position shall be in good ventilation, so that the machine can breathe and exhaust enough air.
- The installing position shall be strong enough to withstand the weight of outdoor unit and be able to isolate the sound and absorb the vibration；Also ensure that the outlet air and noise from the air conditioner will not affect the neighbors.
- The outdoor unit must be lifted by using the designated lift hole. During lifting, take care to protect the air conditioner and avoid knocking the metal parts, thus to prevent rusting in the future.
- Avoid direct sunshine as it might be.
- The installing position must be able to drain the rainwater and the water generated from defrosting.
- The installing position must ensure that the machine will not be buried in the snow or affected by the wastes or oil mist.
- To meet the noise and vibration requirements, the outdoor unit shall be installed by using rubber damping pad or spring damper.
- The installing dimension shall comply with the installation requirements in these instructions. The outdoor unit must be fixed at the installing position.
- The installation shall be done by specialist technicians.

3.2 Selection of Installation Site

- The place with no residual air
- The place where the accessories can be securely fixed
- The place where the air will not obstruct the water inlet pipe or water outlet pipe
- The place that goes beyond the heating range of other heat sources
- The place where the wastewater can be safely drained
- The place where the noise and hot air will not affect the neighbors
- The place where the snow will not be piled
- The place where the water outlet pipe will not be blown by strong wind

Notes:

- Do not use guardrail on four sides. Leave 1m at least above the machine.
- In case of short-circuit risk, please install an adaptor changeable in air direction.
- To avoid short circuiting, please provide adequate suction space when multiple machines are to be installed.
- In the region with snow, the machine shall be installed in a frame or beneath the snow guard, thus to prevent snow piling on the machine.
- Do not install the equipment in a region where any inflammable gas might leak.

* The snow guard and other devices shall be designed and installed by the user.

3.3 Dimensions Data

Appearance of GMV(L)-Pd100W/NaB-K,GMV(L)- Pd 120W/NaB-K,GMV(L)- Pd 140W/NaB-K,GMV(L)- Pd 160W/NaB-K

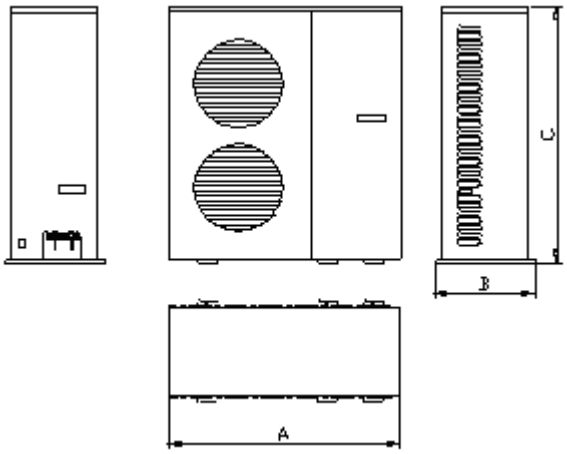

Unit:mm

Model	A	B	C
GMV(L)- Pd100W/NaB-K	1100	340	1250
GMV(L)- Pd120W/NaB-K	1100	340	1250
GMV(L)- Pd140W/NaB-K	1100	340	1250
GMV(L)- Pd160W/NaB-K	1100	340	1250

3.4 Installation space requirements

① Clearance data of single unit - Installation space requirements
GMV(L)-Pd120W/NaB-K Unit Installation Space Dimension

Unit: mm

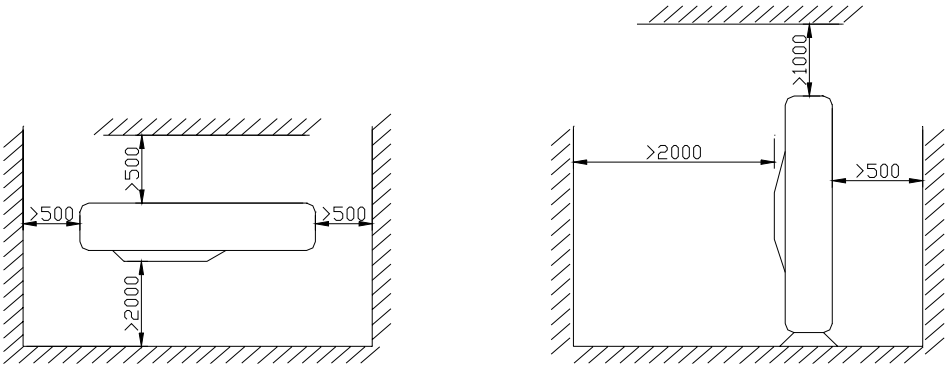

② Clearance data of multiple unit
★Arranged alongside on left and right
◆Air outlet side open

Unit: mm

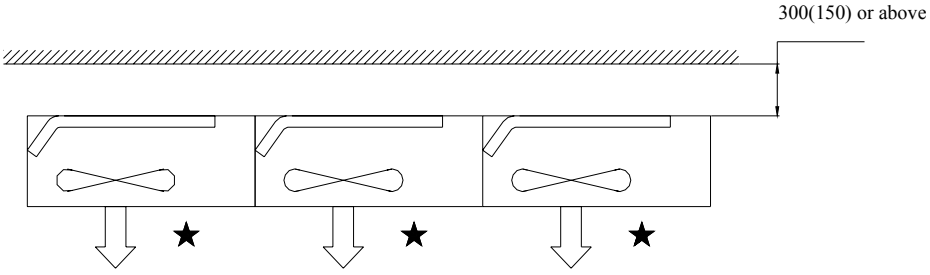

◆ Obstructions on air outlet side

Unit: mm

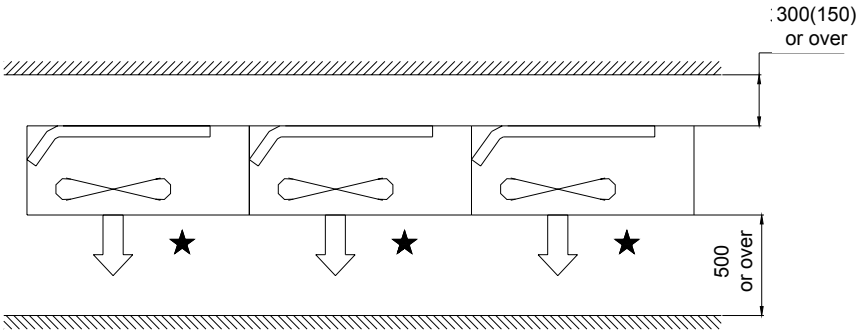

★Arranged on front and back

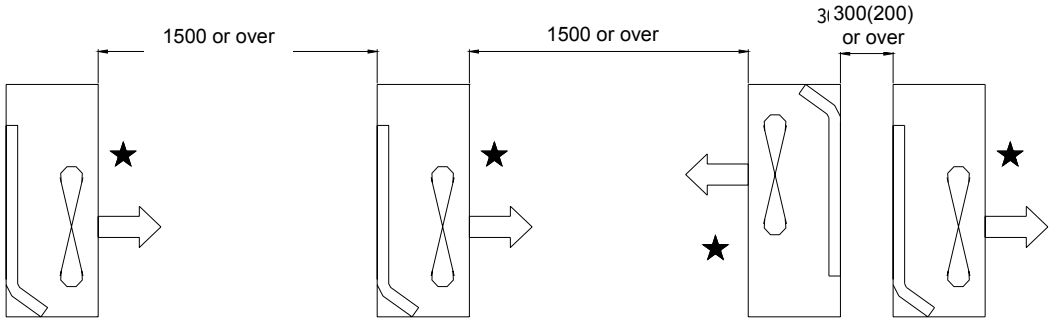

★ Arranged alongside left / right and front / back

Unit: mm

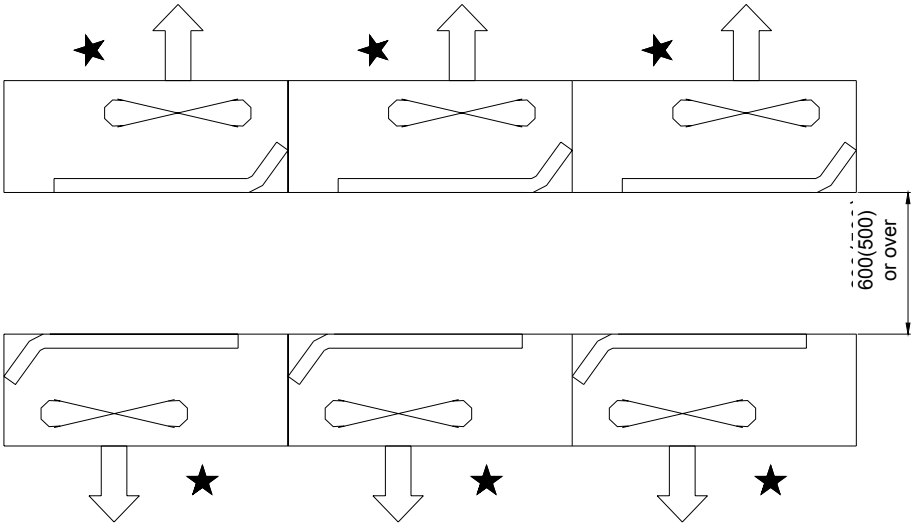

★Arranged alongside on left and right

Unit: mm

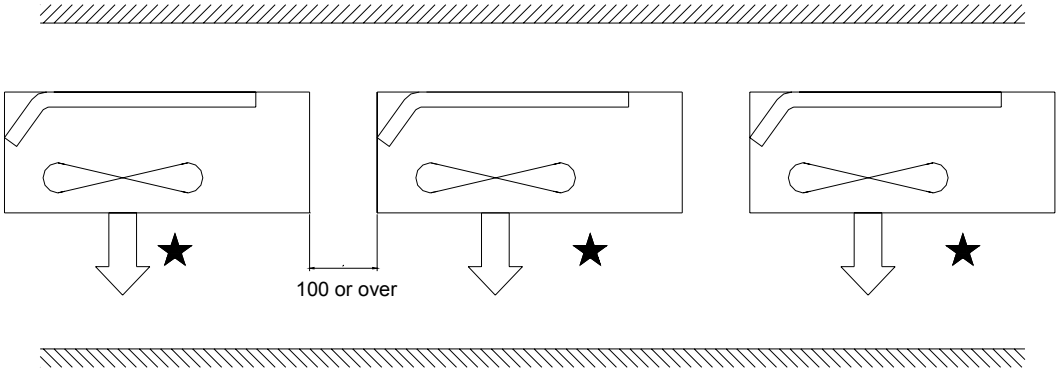

★Arranged by layer on upper and lower

Unit: mm

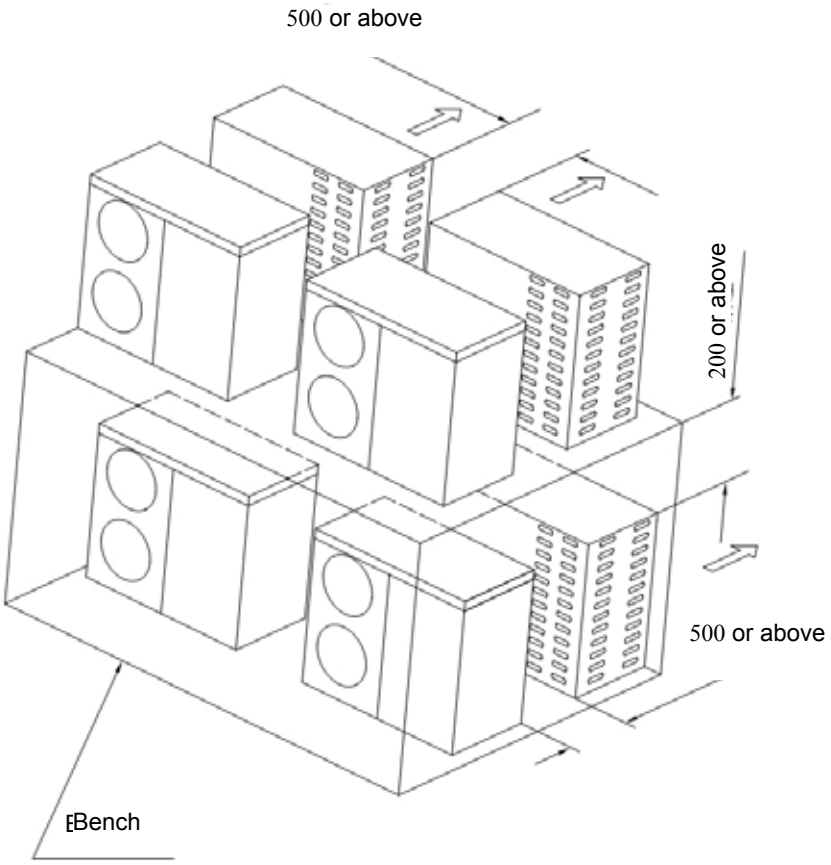

4 INSTALLATION OF INDOOR UNIT

4.1 Duct Type

4.1.1 Selection of installation site

● **The selection of the installation place of the air conditioner unit**

The installation must accord with the national and local safe criterion. Since the quality of installation would affect the operation directly, user should contact the seller and have the conditioner installed and tested by the professional install personnel according to the install instruction instead of install by himself/herself. Only connect the power after all the installation works are finished.

● **The selection of the installation place of the indoor unit**

☆ Prevent direct sun burn.

☆ Make sure that the top steeve, ceiling, and the structure of the construction etc. is strong enough to bear the weight of the unit.

☆ The drainage hose is easy to drain.

☆ The air flow is not blocked at the outlet and intake vents.

☆ The connecting pipe indoors and outdoors can be led to outside conveniently.

☆ The unit cannot be installed in the place where flammable or explosive thing is stored or the place where there is leakage of flammable or explosive gas.

☆ The unit cannot be installed in the place where there is corrupt gas and serious dust, saline fog, lampblack and high humidity.

Note !

The air conditioner unit installed in the following place may have malfunction, if it is unpreventable please contact the Nominated Repair Center Of Gree Electric Appliances, Inc. Of Zhuhai.

①the place with greasy all around; ②the seashore place with salinity and alkali; ③the place with vulcanized gas(such as vulcanized hot spring); ④the place with high frequency equipment (such as wireless equipment, electric welding machine and medical treatment equipment);⑤the place with special environment.

The following figure is applicable to the indoor units of GMV(L)-R22P/Na-K,GMV(L)-R25P/Na-K,GMV(L)-R28P/Na-K,GMV(L)-R36P/Na-K

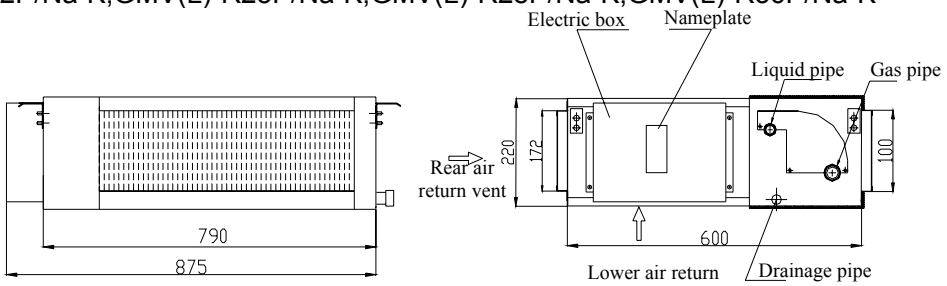

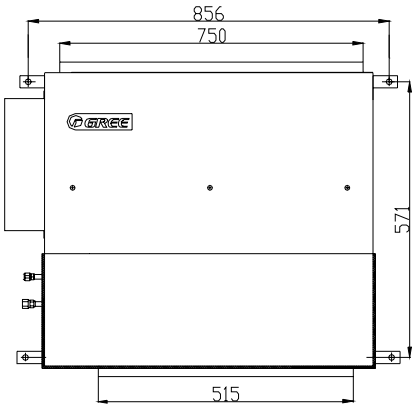

The following figure is applicable to the indoor units of GMV(L)-R45P/Na-K, GMV(L)-R50P/Na-K, GMV(L)-R56P/Na-K,GMV(L)-R63P/Na-K,GMV(L)-R71P/Na-K,GMV(L)-R80P/Na-K,GMV(L)-R90P /Na-K,GMV(L)-R112P/Na-K,GMV(L)-R125P/Na-K,GMV(L)-R140P/Na-K

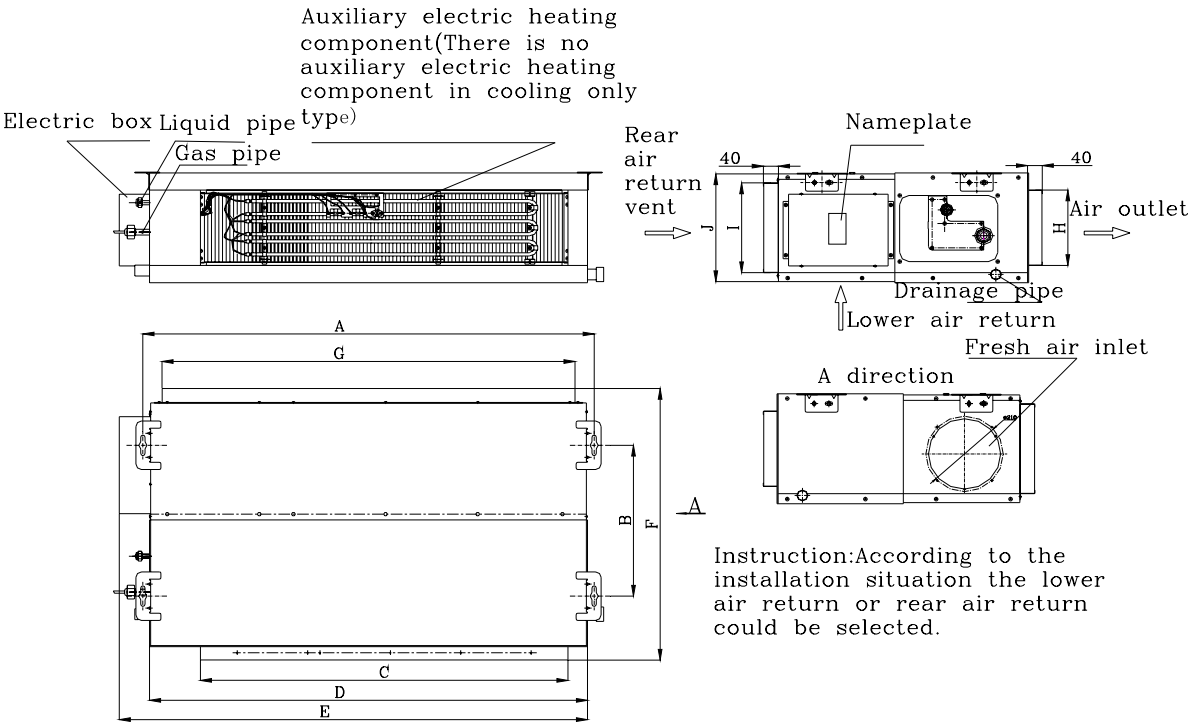

Model	A(mm)	B(mm)	C(mm)	D(mm)	E(mm)	F(mm)	G(mm)
GMV（L）-R45P/ Na-K	932	430	738	904	980	736	738
GMV（L）-R50P/ Na-K	932	430	738	904	980	736	738
GMV（L）-R56P/ Na-K	1112	420	918	1070	1155	756	1008
GMV（L）-R63P/ Na-K	1112	420	918	1070	1155	756	1008
GMV（L）-R71P/ Na-K	1112	420	918	1070	1155	756	1008
GMV（L）-R80P/ Na-K	1112	420	918	1070	1155	756	1008
GMV（L）-R90P/ Na-K	1382	420	1155	1340	1425	756	1278
GMV（L）-R112P/ Na-K	1382	420	1155	1340	1425	756	1278
GMV（L）-R125P/ Na-K	1382	420	1155	1340	1425	756	1278
GMV（L）-R140P/ Na-K	1382	420	1155	1340	1425	756	1278

Model	H(mm)	I(mm)	J(mm)	Liquid pipe(inch)	Gas pipe(inch)	Drainage hose（Outer ×Inner）
GMV（L）-R45P/ Na-K	125	207	266	Φ1/4 "	Φ1/2 "	Φ30×Φ27
GMV（L）-R50P/ Na-K	125	207	266	Φ1/4 "	Φ1/2 "	Φ30×Φ27
GMV（L）-R56P/ Na-K	207	250	300	Φ3/8 "	Φ5/8 "	Φ30×Φ27
GMV（L）-R63P/ Na-K	207	250	300	Φ3/8 "	Φ5/8 "	Φ30×Φ27
GMV（L）-R71P/ Na-K	207	250	300	Φ3/8 "	Φ5/8 "	Φ30×Φ27
GMV（L）-R80P/ Na-K	207	250	300	Φ3/8 "	Φ5/8 "	Φ30×Φ27
GMV（L）-R90P/ Na-K	207	250	300	Φ3/8 "	Φ5/8 "	Φ30×Φ27
GMV（L）-R112P/ Na-K	207	250	300	Φ3/8 "	Φ5/8 "	Φ30×Φ27
GMV（L）-R125P/ Na-K	207	250	300	Φ3/8 "	Φ5/8 "	Φ30×Φ27
GMV（L）-R140P/ Na-K	207	250	300	Φ3/8 "	Φ5/8 "	Φ30×Φ27

The following figure is applicable to the indoor units of GMV（L）-R22P/NaB-K、GMV（L）-R28P/NaB-K、GMV（L）-R36P/NaB-K、GMV（L）-R22PS/NaB-K、GMV（L）-R28PS/NaB-K、GMV（L）-R36PS/NaB-K.

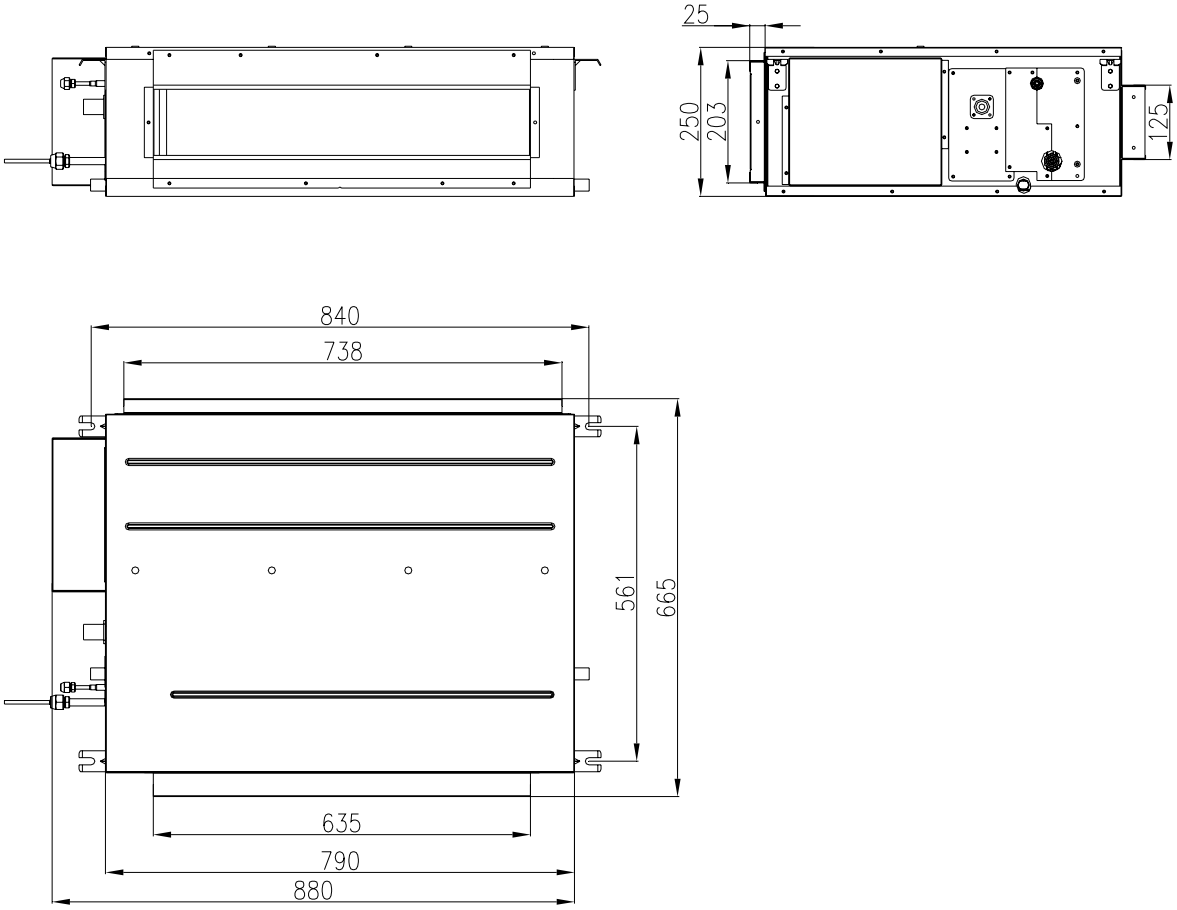

Fig.1

The following figure is applicable to the indoor units of GMV（L）-R45P/NaB-K、 GMV（L）-R56P/NaB-K、GMV（L）-R71P/NaB-K、GMV（L）-R90P/NaB-K、GMV（L）-R112P/NaB-K、GMV（L）-R140P/NaB-K、GMV（L）-R45PS/NaB-K、 GMV（L）-R56PS/NaB-K、GMV（L）-R71PS/NaB-K、GMV（L）-R90PS/NaB-K、GMV（L）-R112PS/NaB-K、GMV（L）-R140PS/NaB-K.

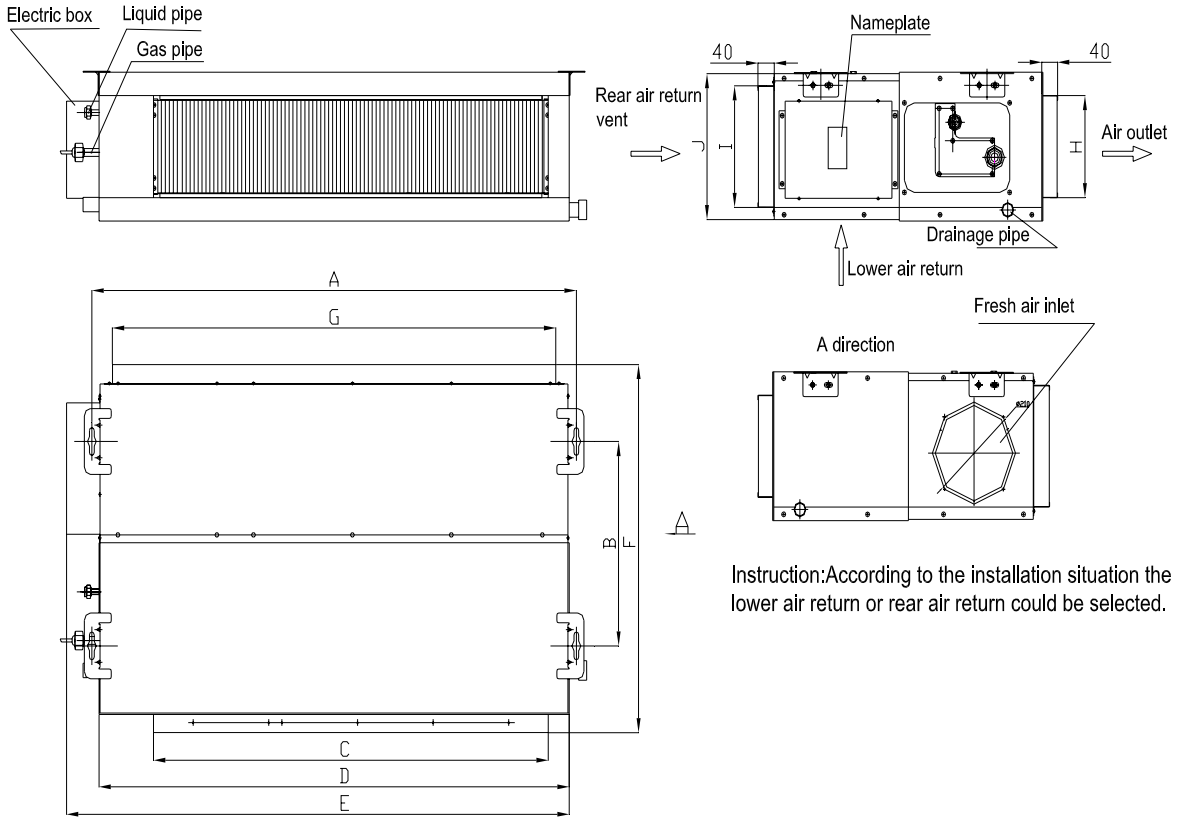

Fig.2

1、Look into from air outlet vent, the wiring is in the left of the unit.

2、The method of wind circle can be selected to bottom back wind or rear back wing according to the installation circumstance of the reality.

型号	A	B	C	D	E	F	G	H	I	J
GMV(L)-R45P/NaB-K GMV(L)-R45PS/NaB-K	932	430	738	892	980	721	738	125	203	266
GMV(L)-R56P/NaB-K、GMV(L)-R71P/NaB-K GMV(L)-R56PS/NaB-K、GMV(L)-R71PS/NaB-K	1114	420	918	1074	1155	736	1010	207	207	300
GMV(L)-R90P/NaB-K、GMV(L)-R112P/NaB-K GMV(L)-R90PS/NaB-K、GMV(L)-R112PS/NaB-K GMV(L)-R140P/NaB-K 、 GMV(L)-R140PS/NaB-K	1382	420	1155	1340	1425	736	1280	207	250	300

4.1.3 Installation space requirements

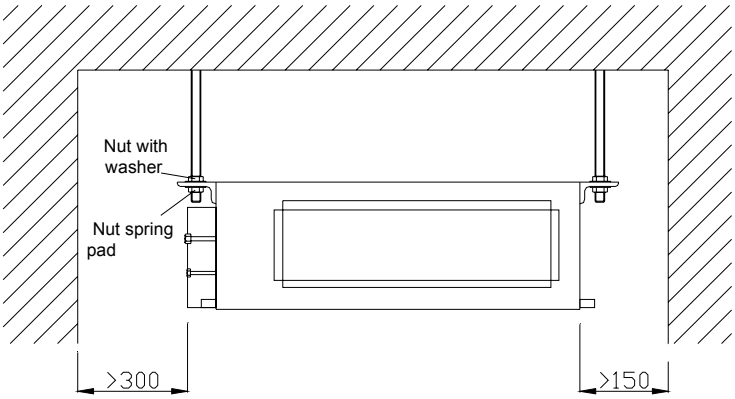

4.1.4 Installation demonstration

① Selection of return air duct

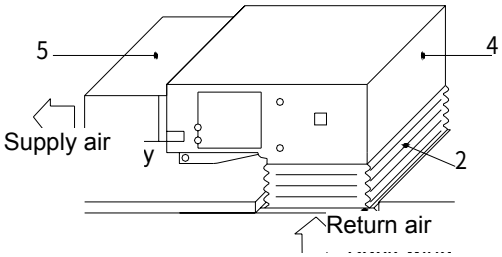

Install the return air pipe (a)

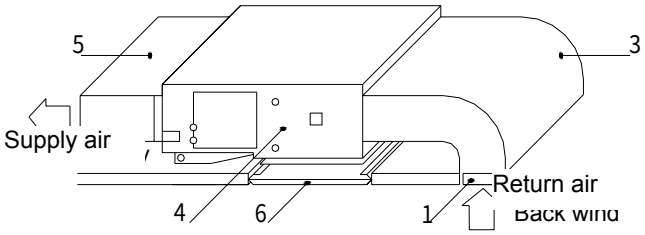

Install the return air pipe (b)

No.	Name	No.	Name
1	Return air inlet (with filter)	4	Indoor unit
2	Canvas air duct	5	Supply air duct
3	Return air duct	6	Test grill

② Installation of fresh air duct

1. When fresh air ductis needed to be connected, cut the fresh air baffle as shown in fig.8. Plug up the gap of fresh air baffle by sponge if fresh air duct is not used.
2. Install the circle flange so that the fresh air duct can be connected as fig.9.
3. Well sealing and heat preservation should be done for both air duct and circle flange pipe.
4. Fresh air should be the air after filtrate treatment.

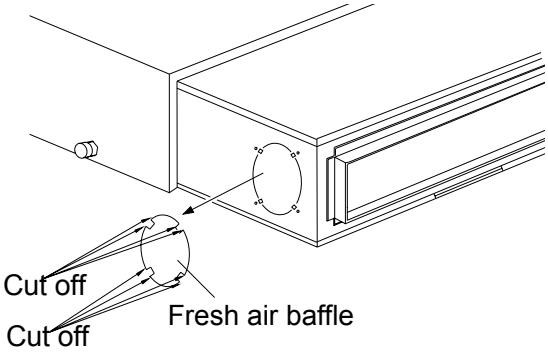

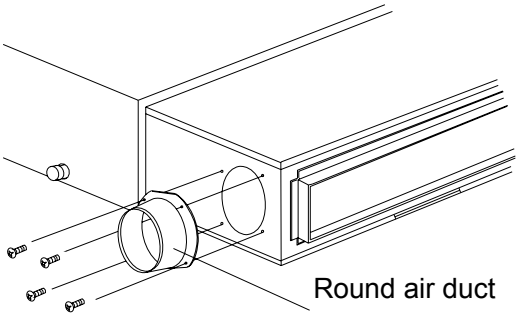

③ Installation of air supply duct

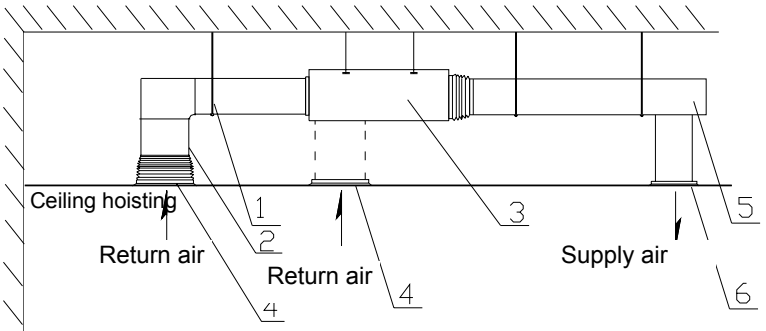

No.	1	2	3	4	5	6
Name	Hoisting	Return air duct	Ducted type indoor unit	Return air inlet	Supply air bent	Air outlet

Note： Fig.6 only shows the installation of back return air inlet.The bottom return air inlet can be installed according to the back return air inlet. The supply air duct, which is rectangle or round, and connected with the air inlet/outlet of the indoor unit, should keep open at least one. The round air duct type should adopt round duct to transmit cold (hot) air to the room. The round air duct should add a transitionary pipe, whose size should match with the size of supply air outlet of the unit. After connecting the transitionary pipe, install the round air outlet connection pipe whose longest length to each individual air outlet should not be over 10m. Ducted type indoor unit model 70 can share 3 trainsitional pipes, while model 100,120 can share 4. The transitional pipe, whose straight length is 200.Round air outlet connection pipe produced by our company, whose diameter is 200, can be ordered separately as standard fittings. Model 50 and the model below it do not share the round air vent. The following is the diagram for installation of round air duct.

⚠ **Note:**

1. The longest length of air duct means the general length of the supply air duct to the farthest supply air outlet plus the general length of return air duct to the relative farthest return air inlet.
2.To the unit with auxiliary heater, if the round air duct is need to connected, the straight length of trainsitional air duct should not shorter than 200mm.

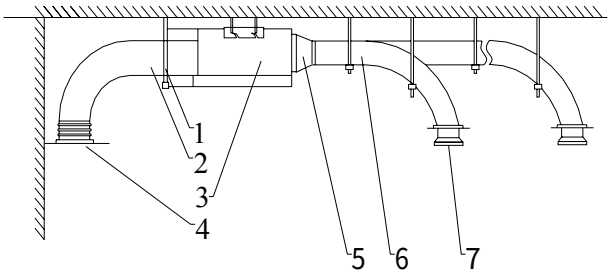

Number	1	2	3	4	5	6	7
Name	Screw	Return air duct	Ducted type indoor unit	Return air inlet	Transitionary pipe	Supply air duct	Air outlet pipe

④ Setting hole for maintenance

After installation of hidden duct-type unit, manhole must be provided in ceiling on the electric box side of the indoor unit. In respect to the manhole, the following points must be taken into consideration:

- For access, the manhole size shall be larger than 500mm×500mm.
- The manhole must be at a possible easily accessible for repair of electric elements and pipe.
- The return air inlet may also be used as manhole for repair of motor.

4.2 4-way cassett type Unit

4.2.1 Selection of installation site

Obstruct should put away from the inlet or outlet of the indoor unit so that the airflow can be blown though all the room.
Make sure that the installation had accorded with the requirement of the schematic diagram of installation spaces.
Select the place which can stand 4 times of the weight of the indoor unit and would not increase the operating noise and oscillate.
The horizontal installation place should be guaranteed.
Select the place where easy drainage of condensated coagulated water, and easy connection with outdoor unit.
Make sure that there are enough space for care and maintenance. Make sure that the distance between the indoor unit and ground is above 1800mm.
When installing the steeve bolt, check if the installation place can stand the weight 4 times of the unit's. If not, reinforce before installation. (Refer to the installarion cardboard and find where should be reinforced)

⚠!

There will be lots of lampblack and dust sticked on the acentric, heat exchanger and water pump in dining room and kitchen, which would reduce the capacity of heat exchanger, thus leading water leakage and abnormal operation of the water pump. The following treatments should be taken under this circumstance:
Ensure that the smoke trap above cooker has enough capacity to obviate lampblack to prevent the indraft of the lampblack by the air conditioner.
Keep the air conditioner far from the kitchen so that the lampblack would not be drafted in by the air conditioner.

Important notices:
To guarantee the good performance, the unit must be installed by professional personnel according with this instruction.
Please contact the local authorized repair department of Gree before installation. Any malfunction caused by the unit that is installed by unauthorized center would not be treated on time by the inconvenience of the business contact.

4.2.2 Dimensions Data

GMV(L)-R140T/Na-K
GMV(L)-R125T/Na-K,GMV(L)-R112T/Na-K,GMV(L)-R100T/Na-K,GMV(L)-R90T/Na-K,GMV(L)-R80T/Na-K,GMV(L)-R71T/Na-K,GMV(L)-R63T/Na-K,GMV(L)-R56T/Na-K ,GMV(L)-R50T/Na-K,GMV(L)-R45T/Na-K ,GMV(L)-R36T/Na-K,GMV(L)-R28T/Na-K

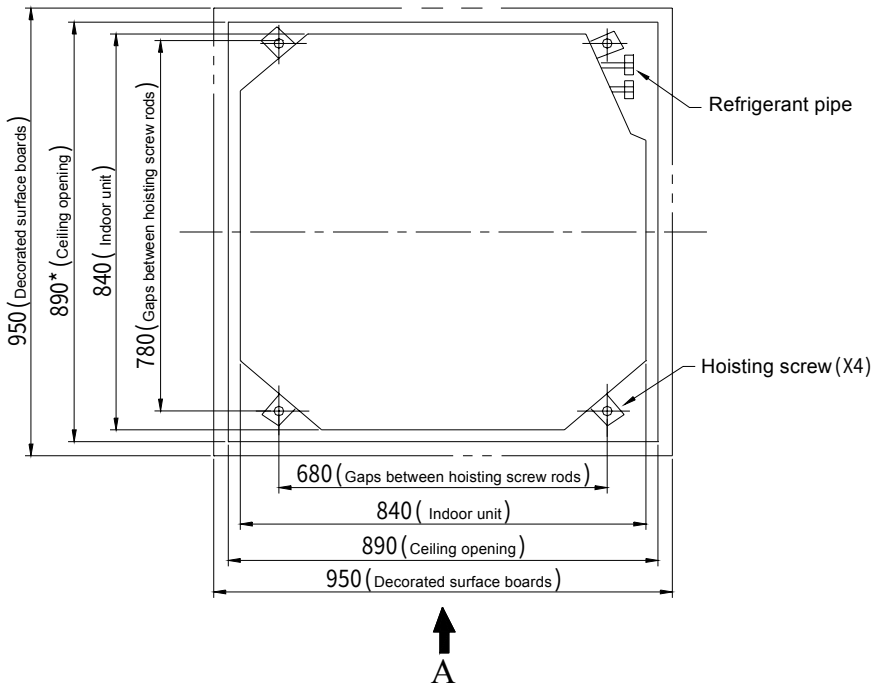

Package Dimension / Model	Width (mm)	Depth (mm)	Height (mm)
GMV(L)-R28T/Na-K	950	950	210
GMV(L)-R36T/Na-K	950	950	210
GMV(L)-R45T/Na-K	950	950	210
GMV(L)-R50T/Na-K	950	950	210
GMV(L)-R56T/Na-K	950	950	310
GMV(L)-R63T/Na-K	950	950	310
GMV(L)-R71T/Na-K	950	950	310
GMV(L)-R80T/Na-K	950	950	310
GMV(L)-R90T/Na-K	950	950	340
GMV(L)-R100T/Na-K	950	950	340
GMV(L)-R112T/Na-K	950	950	340
GMV(L)-R125T/Na-K	950	950	340
GMV(L)-R140T/Na-K	950	950	340

4.2.3 Installation space requirements

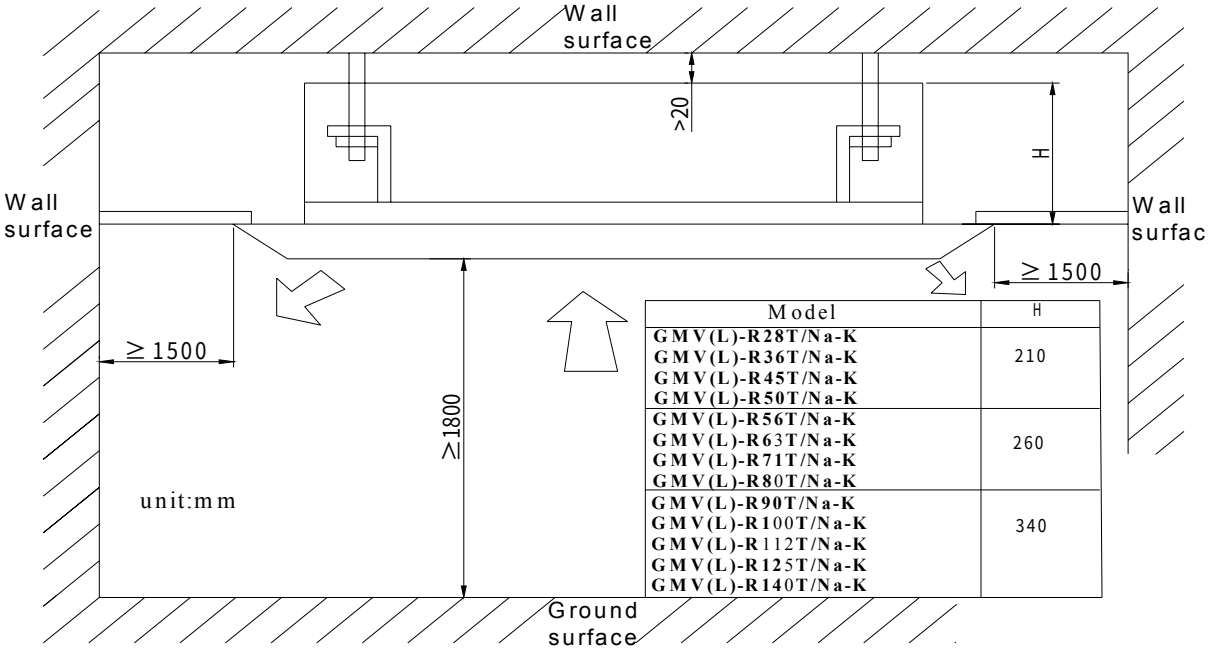

Model	H
GMV(L)-R28T/Na-K GMV(L)-R36T/Na-K GMV(L)-R45T/Na-K GMV(L)-R50T/Na-K	210
GMV(L)-R56T/Na-K GMV(L)-R63T/Na-K GMV(L)-R71T/Na-K GMV(L)-R80T/Na-K	260
GMV(L)-R90T/Na-K GMV(L)-R100T/Na-K GMV(L)-R112T/Na-K GMV(L)-R125T/Na-K GMV(L)-R140T/Na-K	340

4.2.4 Installation demonstration

1 The primary step for installing the indoor unit.

☆ When attaching the hoisting stand on hoisting screw, do use nut and gasket individually at the upper and lower of the hoisting stand to fix it. The use of gasket anchor board can prevent gasket breaking off.

2 Use installation cardboard

☆ Please refer to the installation cardboard about the dimension of ceiling opening.

☆ The central mark of the ceiling opening is marked on the install cardboard.

☆ Install the installation cardboard on the unit by bolt (3 piece), and fix the angle of the drainage hose at the outlet vent by bolt.

3 Adjust the unit to the suitable installing place. (Refer to the fig.2)

4 Check if the unit is horizontal.

☆ Inner drainage pump and bobber switch are included in the indoor unit. Check if 4 angles of each unit are horizontal by water level. (If the unit is slant toward the opposite of the coagulate water flow, there may be malfunction of the bobber switch and leading water drop.)

5 Remove the gasket anchor board used to prevent gasket breaking off and tighten the nut on it.

6 Remove the installation cardboard.

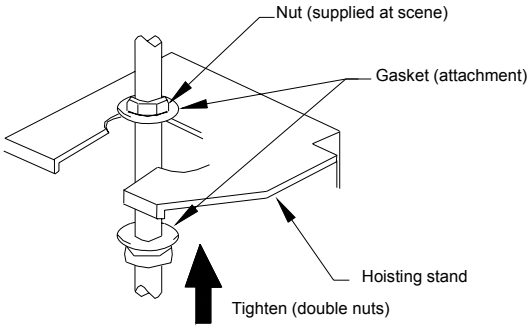

[Fix the hoisting stand firmly]

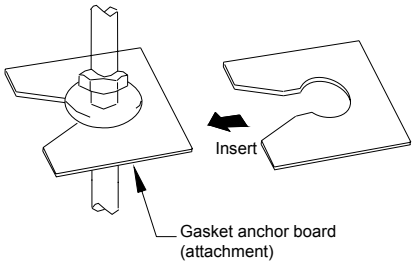

[Fix the gasket firmly]

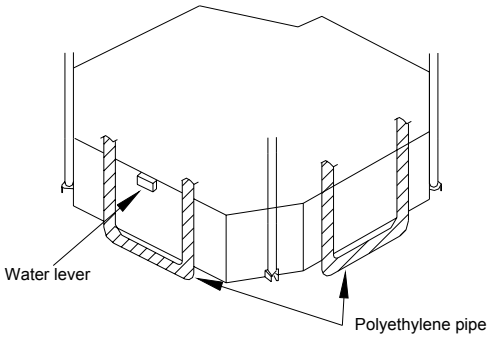

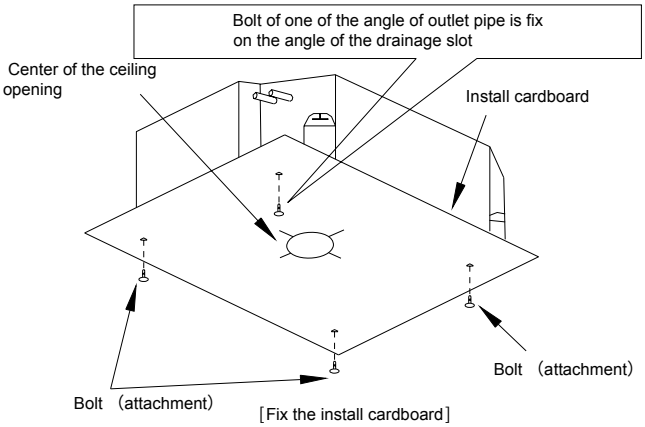

[Fix the install cardboard]

Note !

● Please **do tighten the nuts and bolts to prevent air conditioner breaking off**.

● **Connect the refrigerant pipe**

☆ When connecting the pipe to the unit or remove it from the unit, please do use both spanner and torque wrench. as shown in fig.3.

☆ When smearing both inside and outside of the flare nut with antifreezing motor oil, screw it by hand and then tighten it with spanner.

☆ Refer to form 1 to check if the wrench has been tightened (too tight would mangle the nut and lead leakage).

☆ Examine the connection pipe for gas leakage, and then take the treatment of heat insulation, as shown in the fig.3.

☆ Only use median sponge to entwine the wiring interface of the gas pipe and heat preservation sheath of the gas collection pipe.

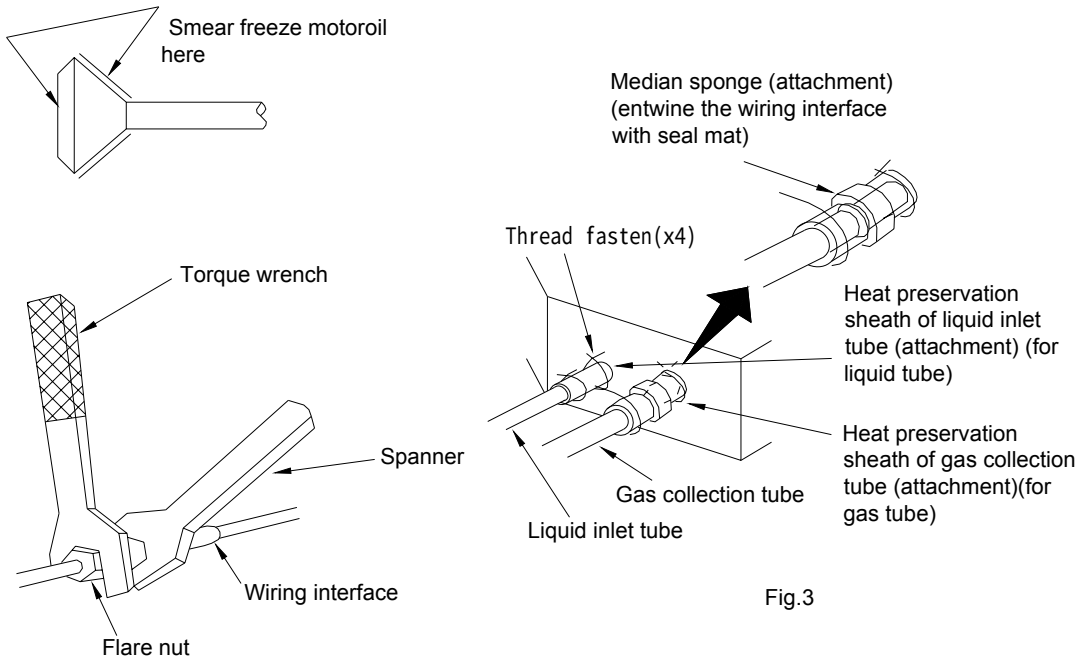

Fig.3

Form 1: The tightening torque needed for tightening nut

Diameter（Inch）	Surface thickness（mm）	Tightening torque (N.m)
Φ1/4”	≥0.5	15-30 (N·m)
Φ3/8”	≥0.71	30-40 (N·m)
Φ1/2”	≥1	45-50 (N·m)
Φ5/8”	≥1	60-65 (N·m)
Φ3/4”	≥1	70-75 (N·m)

● **Drainage hose**

1. Installing the drain hose

☆ The diameter of the drainage hose should be equal or bigger than the connection pipe’s. (The diameter of polythene pipe: Outer diameter 25mm Surface thickness ≥1.5mm)

☆ Drainage hose should be short and drooping gradient should be at least 1/100 to prevent the formation of air bubble.

☆ If drainage hose cannot has enough drooping gradient, drain raising pipe should be added.

☆ To prevent bent of the drain hose, the distance between hoisting stands should is 1 to 1.5m.

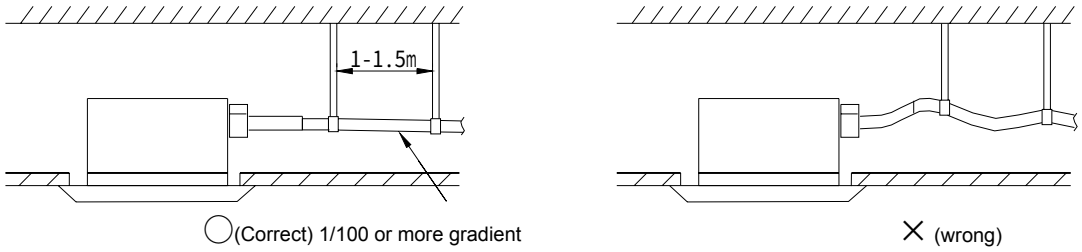

☆ Use the drainage hose and clamp attached. Insert the drainage hose to the drain vent, and then tighten the clamp.

☆ Entwine the big sponge on the clamp of drainage hose to insulate heat.

☆ Heat insulation should be done to indoor drainage hose.

Drain stepup pipe note

☆ The installation height of the drain raising pipe should less than 280mm.

☆ The drain raising pipe should form a

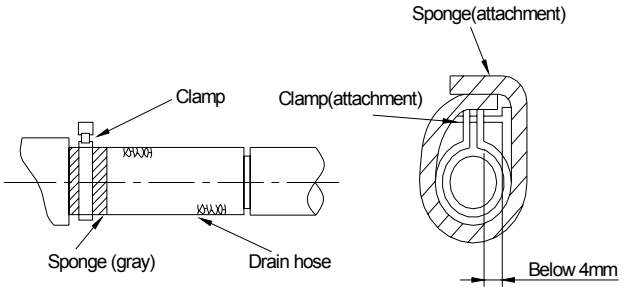

right angle with the unit, and distance to unit should not be beyond 300mm.

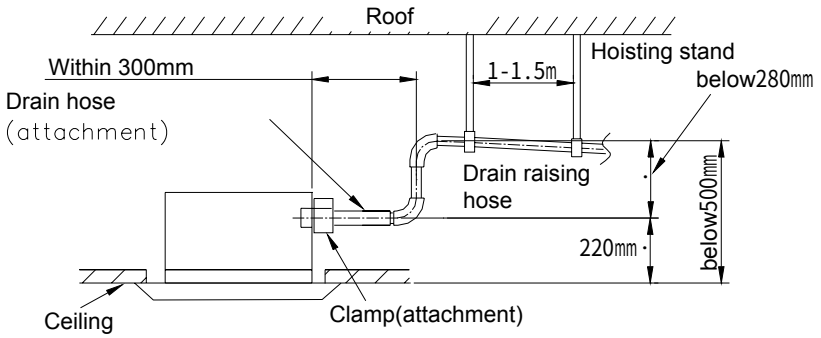

Instruction

☆ The slant gradient of the attached drainage hose should be within 75mm so that the drain hole doesn't has to endure the unnecessary outside force.

☆ Please install the drainage hose according to the following process if several drain hoses connected together.

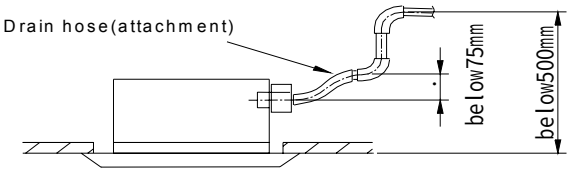

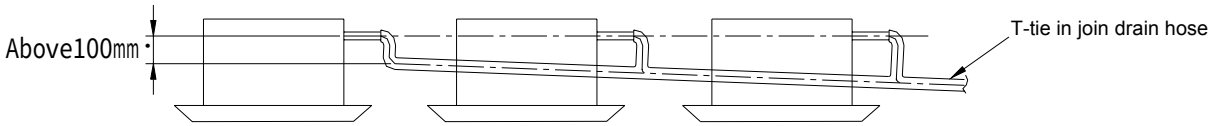

The specs of the selected join drain hose should fits the running capacity of the unit.

2 Check the smoothness of drain after installation.

☆ Check the drain state by immitting 600cc water slowly from the outlet or test hole.

☆ Check the drain in the state of refrigerating after installation of the electric circuit.

[Way of immiting]

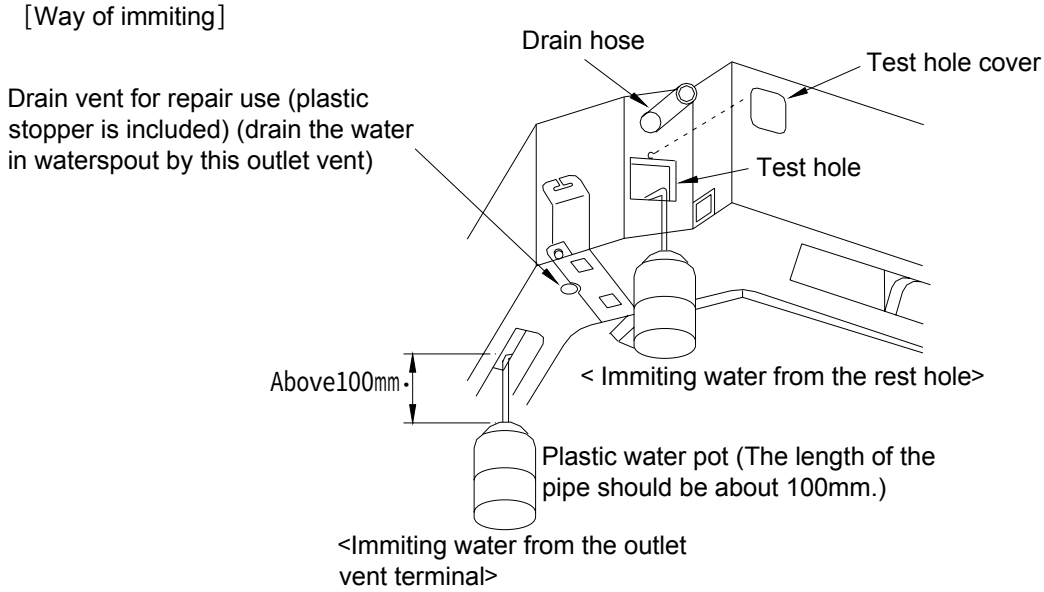

4.3 Floor Ceiling Type

4.3.1 Selection of installation site

Selection of Installation Location for Air Conditioner Unit

The installation of air conditioner unit must be in accordance with national and local safety codes. Installation quality will directly affect the normal use of air conditioner unit. The user is prohibited from installation by himself. Please contact your dealer after buying this machine. Professional installation workers will provide installation and test services according to installation manual. Do not connect to power until all installation work is completed.

● **Selection of Installation Location**

Such a place where cool air can be distributed throughout the room.
Such a place where is condensation water is easily drained out.
Such a place that can handle the weight of indoor unit.
Such a place, which has easy access for maintenance.
Such a place where easy connection with the outdoor unit is permitted.
Such a place which is 1m or more away from other electric appliances such as television, audio device, etc.
Avoid a location where there is heat source, high humidity or inflammable gas.
Do not use the unit in the immediate surroundings of a laundry, a bath, a shower or a swimming pool.
Be sure that the installation conforms to the installation dimension diagram.

● **Caution for installation where air conditioner trouble is likely to occur**

Where there is too much oil.
Where it is acid base area.
Where there is irregular electrical supply.

4.3.2 Dimensions Data

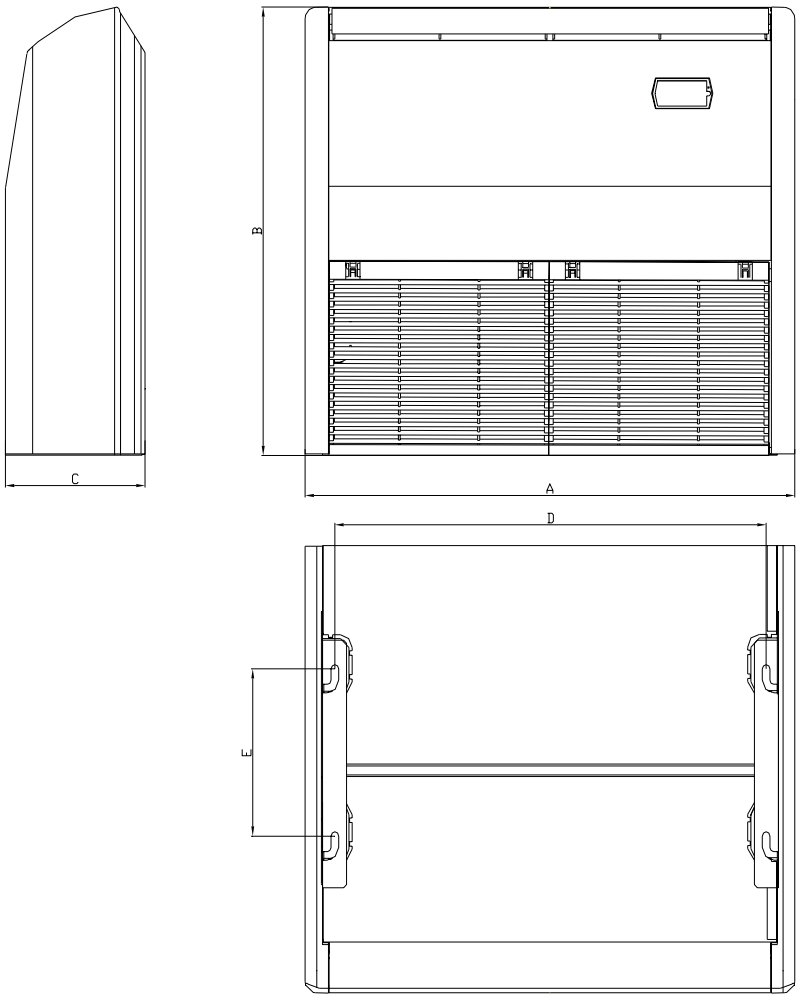

Model	Installation dimensions		Outline dimensions		
	E	D	A	B	C
GMVL-R28Zd/Na-K GMV-R28Zd/Na-K	260	745	840	695	238
GMVL-R36Zd/Na-K GMV-R36Zd/Na-K	260	745	840	695	238
GM(L-R50Zd/Na-K GMV-R50Zd/Na-K	260	745	840	695	238
GMVL-R71Zd/Na-K GMV-R71Zd/Na-K	260	1220	1300	600	188
GMVL-R90Zd/Na-K GMV-R90Zd/Na-K	260	1500	1590	695	238
GMVL-R112Zd/Na-K GMV-R112Zd/Na-K	260	1500	1590	695	238
GMVL-R125Zd/Na-K GMV-R125Zd/Na-K	260	1500	1590	695	238

4.3.3 Installation space requirements

The space around the unit is adequate for ventilation (Refer to Fig.1)

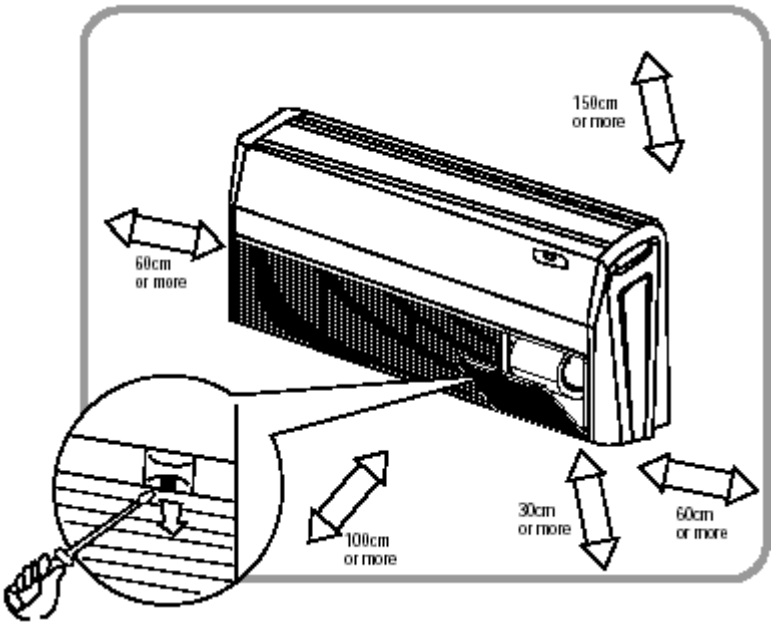

Fig.1

4.3.4 Installation demonstration

● **There are 2 styles of installation**

☆ **Ceiling type**

☆ **Floor type**

Each type is similar to the other as follows:

1. Determine the mounting position on ceiling or wall by using paper pattern to indicate indoor frame. Mark the pattern and pull out the paper pattern. (Refer to Fig.2)
2. Remove the return grill, the side panel and the hanger bracket from the indoor unit as per procedure bellow.

☆ Press the fixing knob of the return air inlet grills, the grilles will be opened wider and then pull them out from the indoor.

☆ Remove the side panel fixing screw and pull to the front direction (arrow direction) to remove. Side panel fixing screw (Refer to Fig.3).

☆ Loosen two hanger bracket setting bolts (M8) on eath side for less than 10mm. Remove two hanger bracket fixing bolts (M6) on the rear side. Detach the hanger bracker by pulling it backward (Refer to Fig.5).

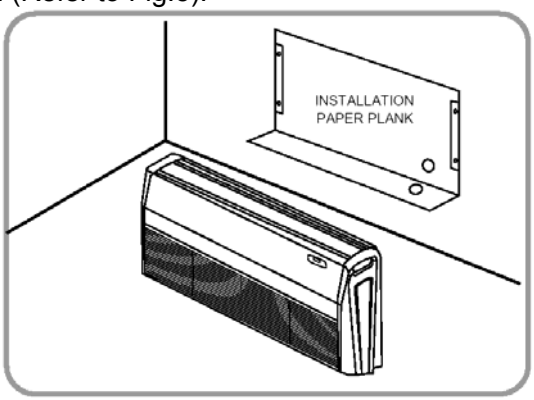

Fig.2

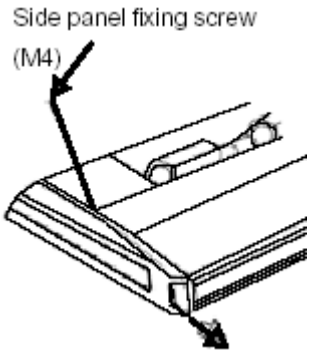

Fig.3

3. Set the suspension bolt. (Use W3/8 or M10 size suspension bolts)

☆ Adjust the distance from the unit to the ceiling slab beforehand (Refer to Fig.4)

4. Fix the hanger bracket to the suspension bolt.

Warning !

☆ Make sure that extended suspension bolt from the ceiling stays inside the arrowed position. Readjust the hanger bracket when it is outside the arrowed position. (Refer to Fig.6)

☆ Suspension bolt stays inside the cap of indoor unit. Never remove the cap.

5. Lift the unit and slide forward unit the dent. (Refer to Fig.7)

6. Screw tightly both hanger bracket-setting bolts (M8). (Refer to Fig.5)

7. Screw tightly both hanger bracket-fixing bolts (M6) to prevent the movement of the indoor unit. (Refer to Fig.5)

8. Adjust the height so that rear side of the drainpipe slightly inclines to improve drainage.

Caution !

☆ Adjust the height by turning the nut with a spanner.
Insert the spanner from the hanger bracket opening. (Refer to Fig.8)

In case of hanging

It is possible to install using inward facing hanger brackets by not removing the brackets from the indoor unit. (Refer to Fig.9)

Be sure to use only the specified accessories and parts for installation work.

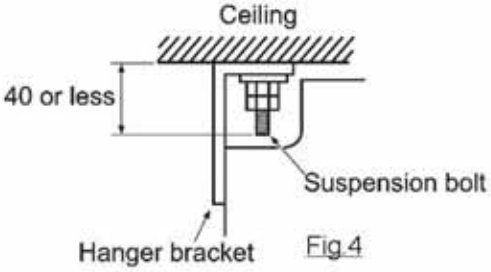

Fig.4

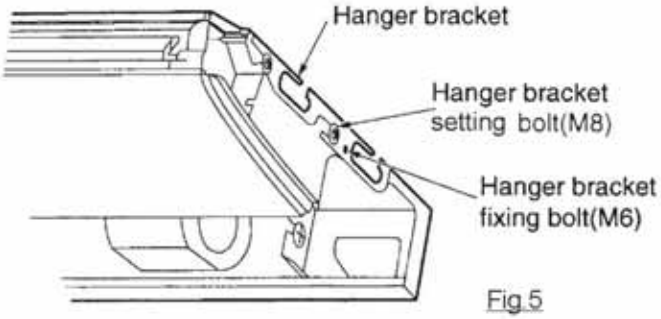

Fig.5

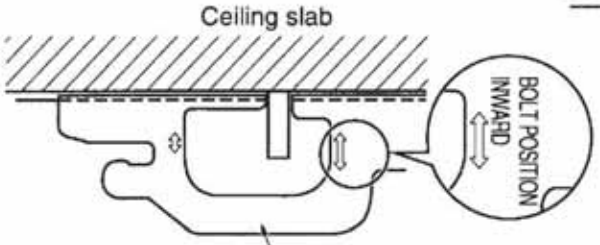

Fig.6

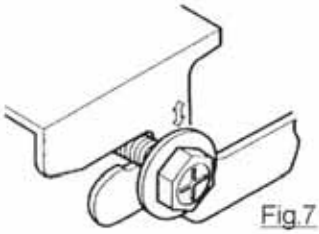

Fig.7

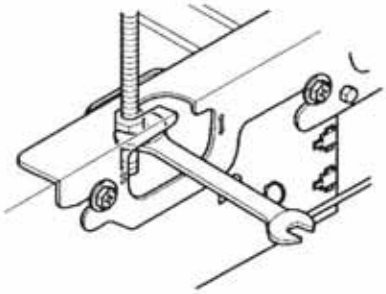

Fig.8

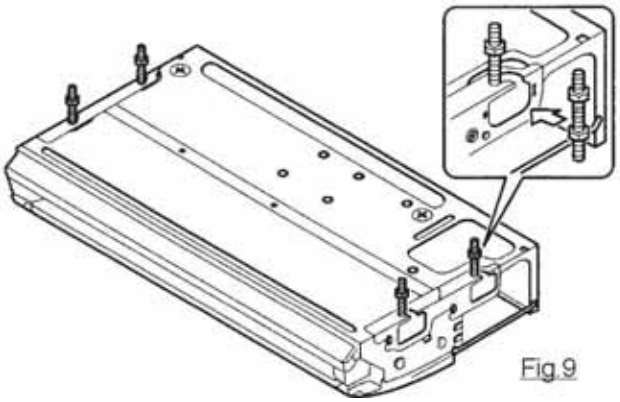

Fig.9

4.4 Wall mounted type

4.4.1 Dimensions Data

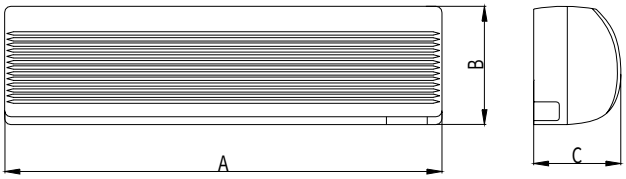

Remark :The appearance will be different according to the models.

Model	GMV(L)-R22G/NaB-K GMV(L)-R22G/NaC-K	GMV(L)-R28G/NaB-K GMV(L)-R28G/NaC-K	GMV(L)-R36G/NaB-K GMV(L)-R36G/NaC-K	GMV(L)-R45G/NaB-K GMV(L)-R45G/NaC-K
A(mm)	770	770	830	830
B(mm)	250	250	285	285
C(mm)	190	190	189	189

Model	GMV(L)-R50G/NaB-K	GMV(L)-R56G/NaB-K
A(mm)	1020	1020
B(mm)	310	310
C(mm)	228	228

Model	GMV(L)-R71G/Na-K	GMV(L)-R80G/Na-K
A(mm)	1178	1178
B(mm)	326	326
C(mm)	227	227

4.4.2 Installation space requirements

Schematic diagram of installation spaces

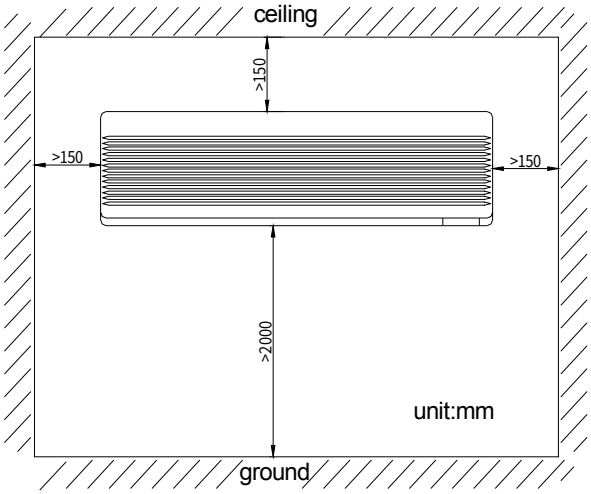

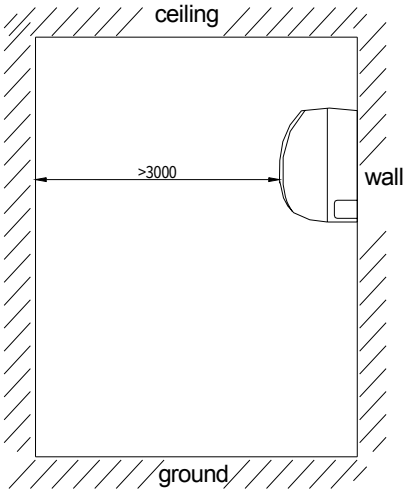

Important Notice:

The unit must be installed by the professional personnel according to this install instruction to ensure the well use.

Please contact the local authorized repair department of Gree before installation. Any malfunction caused by the unit that is installed by unauthorized center would not be treated on time by the inconvenience of the business contact.

It should be guided under the professional personnel when the air conditioner unit is moved to other place.

4.4.3 Installation demonstration

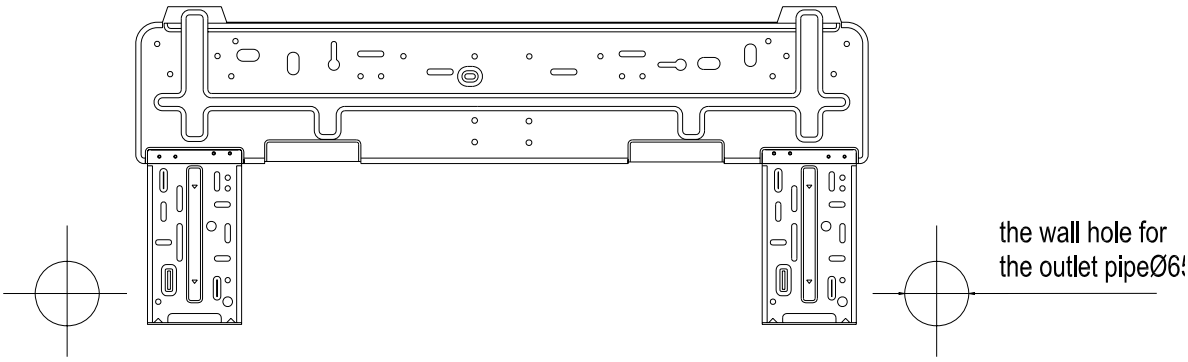

Fig.1

1. Find the horizontal position by seton method; since the drainage hose is on the left side, adjust the rear panel to make its left side a little bit lower.
2. Fix the rear panel on the wall by bolt.
3. After installing the rear panel, pull it by hand to check if it is firm enough. The hang panel should support the weight of an adult (60KG), and the weight shared by every bolt for steady should be fairly even.
4. The diameter showed on the fig.1 is 65mm.

Installation the Wall Mounted Type indoor unit

☆ Make the piping hole (Φ65mm) in the wall at a slight downward slant to the outdoor side. The center of the hole should be determined refer to Fig.1

☆ Insert the piping-hole sleeve into the hole to prevent the connected piping and wiring from being damaged when passing through the hole.

● **Install the drainage hose**

For well draining, the drainage hose should be placed at a downward slant.

Do not wrench or bend the drainage hose or flood its end bywater. (Fig.2)

☆ Wrap heat resistant material when connect the longer drainage hose though indoor.

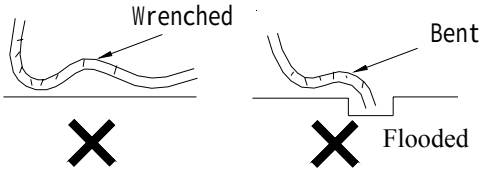

Fig .2

● **Install the connection pipes**

Connect the connection pipe with the two relative leading pipes, and tie the nut on tie –in of the connect pipe tightly.

Note !

☆ Be careful in bending the connection pipes, or you will damage the pipes.

☆ If the tightening torque is too great in tightening the flare nut, leakage will happen.

4.5 1-way cassett type Unit

4.5.1 Selection of installation site

1. Obstruct should be away from the air intake or outlet vent of the indoor unit so that the airflow blow all over the place of the room.

2. Make sure the installation of the indoor unit accords with the requirement for installation dimension drawing.

3. Select the place which can withstand 4 times weight of the indoor unit and would not increase the operating noise and shake.

4. The installation place should be horizontal.

5. Select the place, where coagulated water is easy to discharge and outside unit to be connected.

6. Above 18000mm between the earth and indoor unit should be ensured for maintenance and repair.

7. Use hoisting screw to check if the installation place can withstand 4 times weight of the units and strengthen it before installing.

4.5.2 Dimensions Data

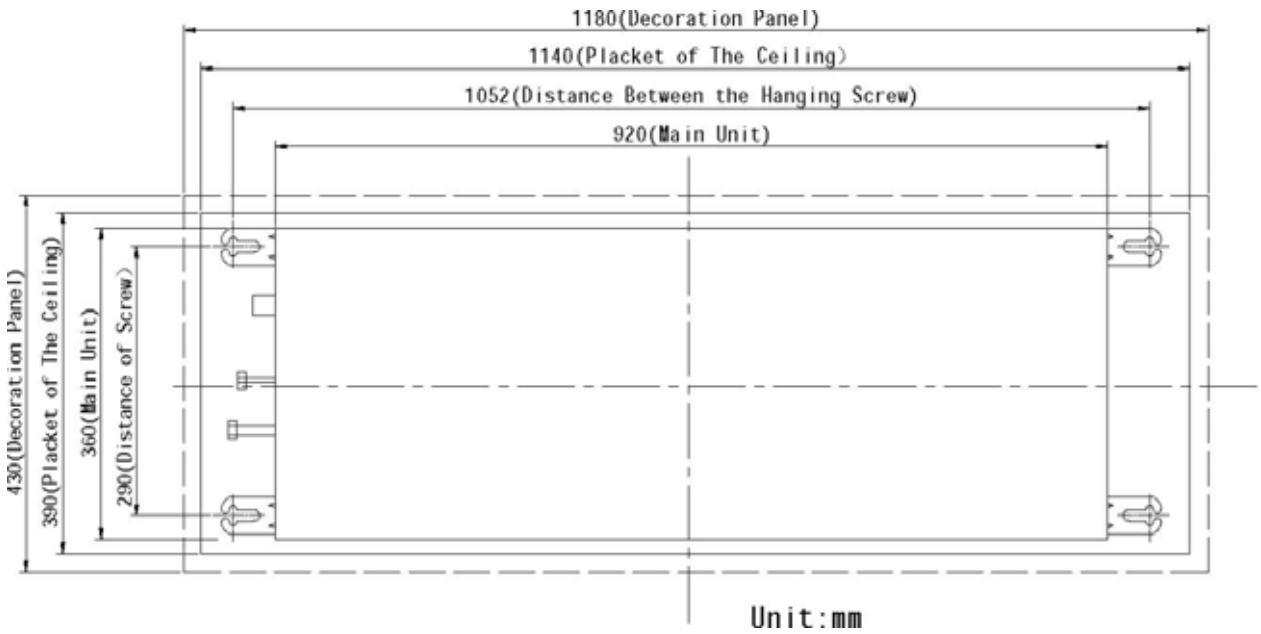

Important notice:

Drilling the hole of the ceiling and installing the units must be operated by professionals

4.5.3 Clearance data

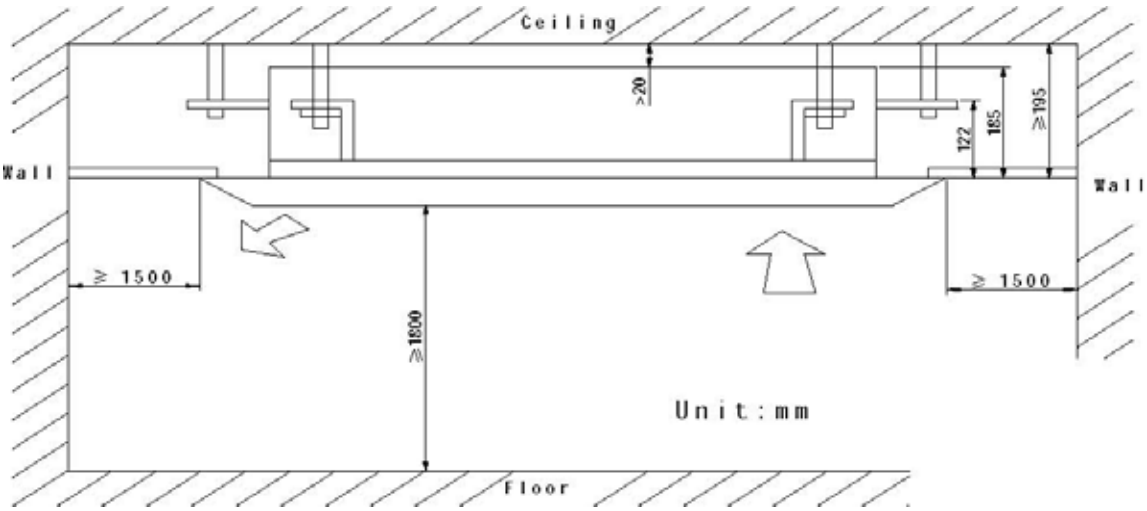

4.5.4 Installation demonstration

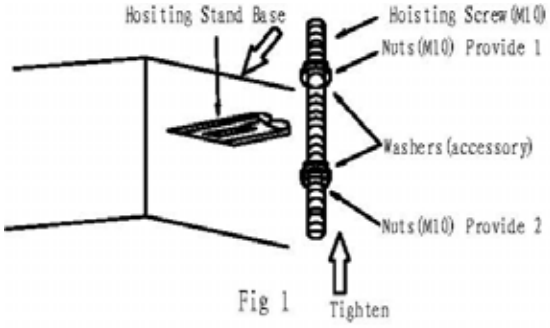

Fig 1

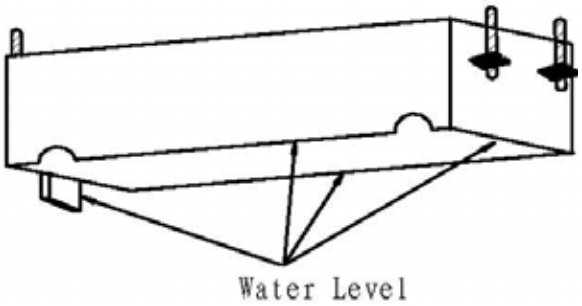

Fig 2

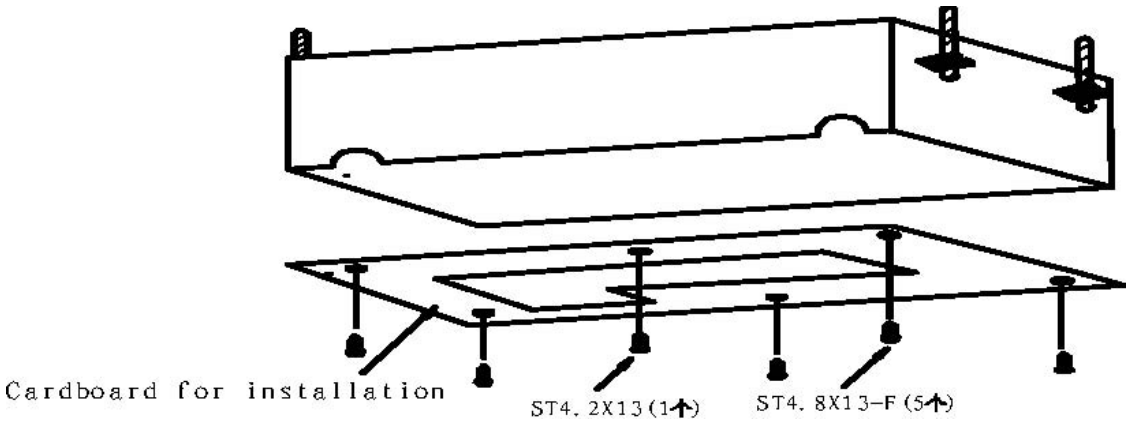

Fig 3

Hoisting the main body of the unit

1. Hoisting the main body

Attach the hoisting stand base to hoisting screw. In order to firm the hoisting stand base, use nuts with washers on either end of it.(refer to Fig. 1)

2. Please refer to the dimension of ceiling opening on the cardboard for installation

- There is a mark for ceiling opening center on the cardboard.
- There is also a mark for main body center on the cardboard.
- Use screws to fix the installation cardboard on the unit. (refer to Fig.3)

3. Adjust the unit to right installation place.
4. Check if the unit is horizontal.

   Inner drainage pump and bobber switch are installed in indoor unit. Check if every side of the unit is horizontal by water lever. (If the unit slants to opposite direction towards which coagulate water flows, it will bring malfunction to the bobber switch and cause water drops. (refer to Fig.2)
5. Unscrew the screws on the cardboard, which can be used for installing front panel.

● Drainage pipe

1. Installing drainage pipe
The diameter of drainage pipe should be larger than that of connecting pipe. (Polythene pipe: dimension: outer diameter 25mm wall thickness≥1.5mm)

● Drainage pipe should be as short as possible and drooping gradient at least 1/100 to avoid the formation of air bubble.

● If drainage hose cannot have enough drooping gradient, drainage raising pipe should be installed.

● In order not to bend the drainage hose, the distance between hoisting stands should be 1 to 1.5m..

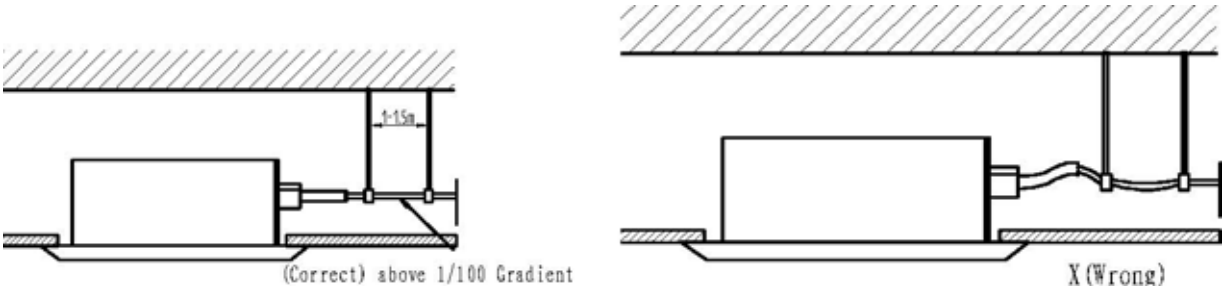

● With accessory drainage hose and clamp, insert the drainage hose into the drainage faucet, and then tighten the clamp.

● Entwine the clamp of drainage hose with the big sponge to isolate heat.

● Isolate heat for the outdoor drainage host.

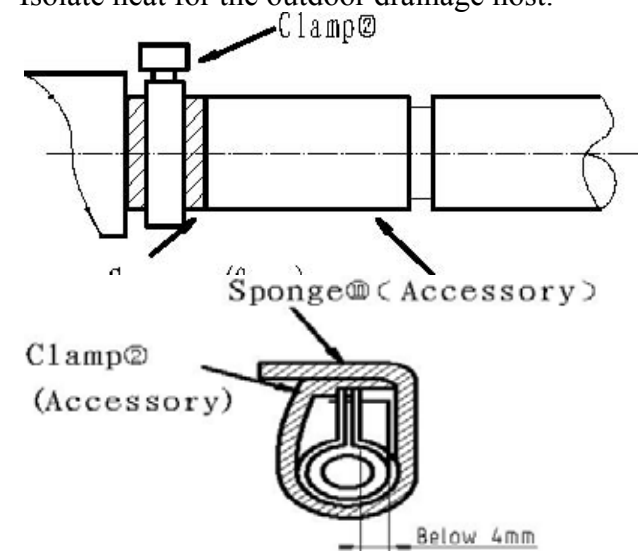

Sponge (Gray) Drainage Hose

Notice for drainage raising pipe

● The installation height should be less than 280mm.

● A right angle should be formed by the drainage raising pipe and unit, which should not be more than 300mm far from the unit.

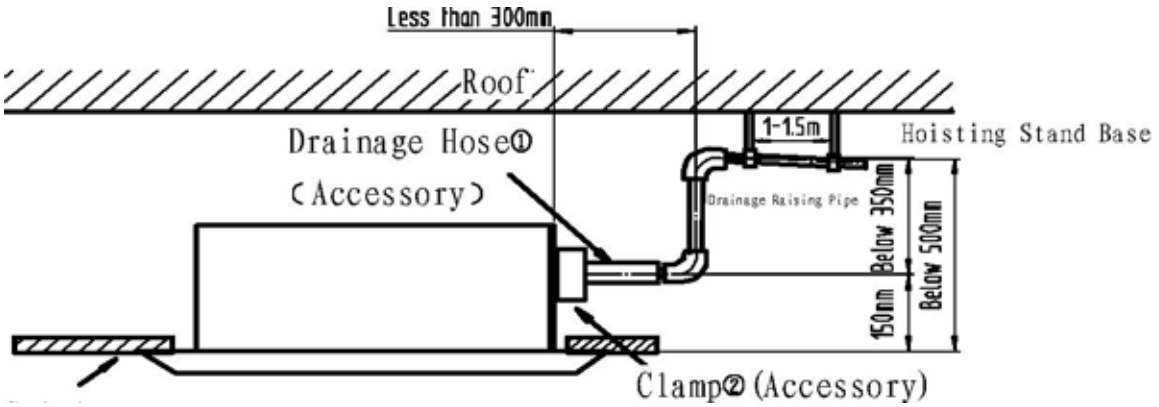

Ceiling

Note：

● The gradient of the accessory drainage hose should be within 75mm so that the drainage faucet need not endure extra outside force.

● If several drainage hoses join together, please install them according to the following process.

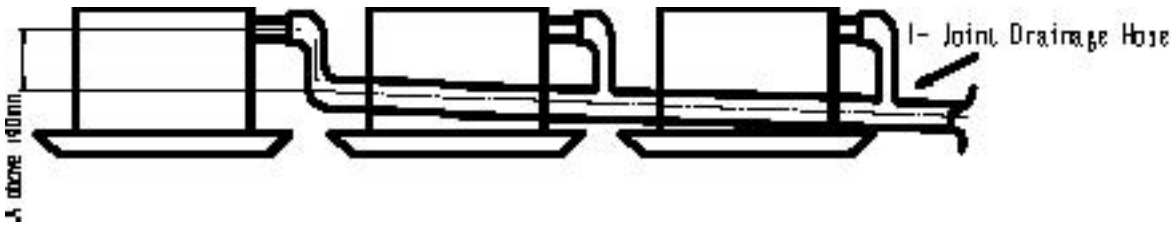

The specs of the selected joint hose should fit the running capacity of the units.

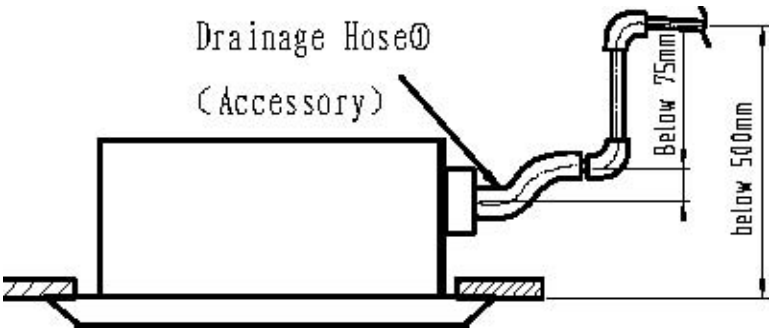

● Front panel body and installation

1.Take off the front panel from the panel body.

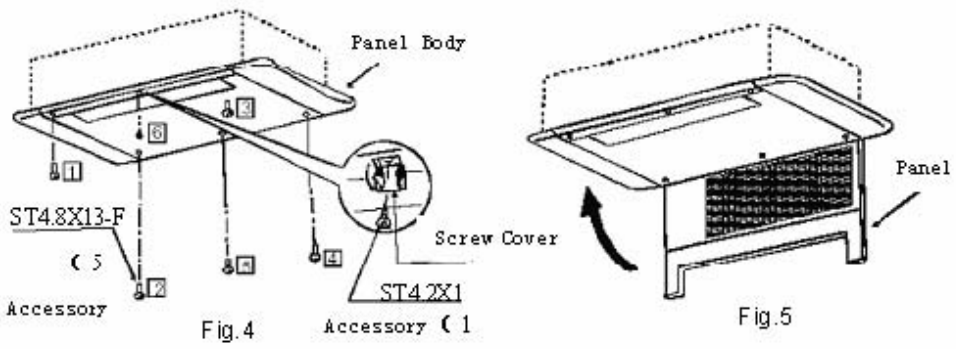

Fig.4 Fig.5

2. AS shown in Fig.4, install the panel body, and then tighten the screws according to the sequences in the figures.

3 .As shown in Fig.5, install the panel on the panel ,and then turn it for fastening

4.6 cassette type indoor unit

Schematic diagram of installation spaces

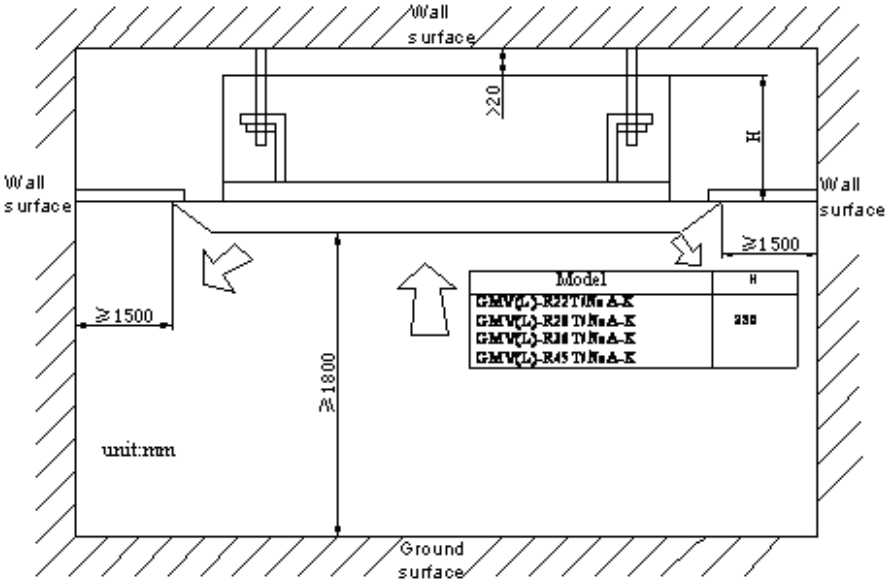

Fig.1

● Select install location of the indoor unit

1. Obstruct should put away from the intake or outlet vent of the indoor unit so that the airflow can be blown though all the room.
2. Make sure that the installation had accord with the requirement of the schematic diagram of installation spaces.
3. Select the place where can stand 4 times of the weight of the indoor unit and would not increase the operating noise and oscillate.
4. The horizontally of the installation place should be guaranteed.
5. Select the place where easy drain condensated coagulated water, and easy connect with outdoor unit.

6. Make sure that there are enough space for care and maintenance. Make sure that the weight between the indoor unit and ground is above 1800mm.
7. When installing the steeve bolt, check if the install place can stand the weight 4 times of the unit's. If not, reinforce before installation. (Refer to the install cardboard and find where should be reinforced)

Note !

There will be lots of lampblack and dust stick on the acentric, heat exchanger and water pump in dining room and kitchen, which would reduce the capacity of heat exchanger, lead water leakage and abnormal operation of the water pump. **The following treatment should be taken under this circumstance:**

1. Ensure that the smoke trap above cooker has enough capacity to obviate lampblack to prevent the indraft of the lampblack by the air conditioner.
2. Keep the air conditioner far from the kitchen so that the lampblack would not be indraft by the air conditioner.

● Important notice:

☆ To guarantee the good performance, the unit must be installed by professional personnel according with this instruction.

☆ Please contact the local Gree special nominated repair department before installation. Any malfunction caused by the unit that is installed by the department that is not special nominated by Gree would not deal with on time by the inconvenience of the business contact.

● Dimension of ceiling opening and location of the hoisting screw (M10)

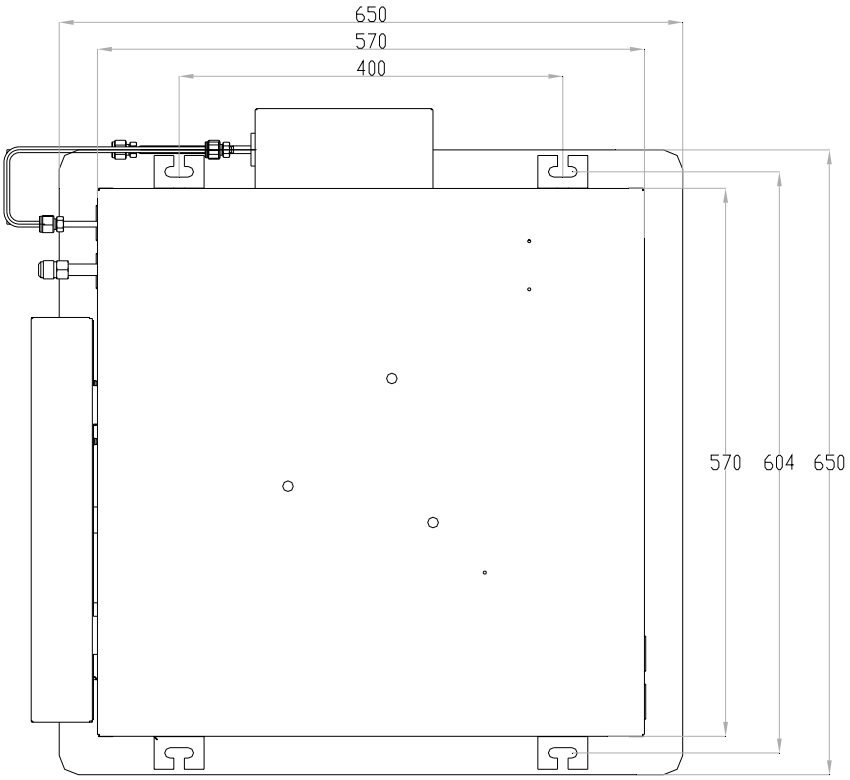

Install dimension of mode

GMV（L）-R45T/ NaA-K 、GMV（L）-R36T/ NaA-K、GMV（L）-R28T/ NaA-K、GMV（L）-R22T/ NaA-K、

☆ The drilling of holes in the ceiling must be done by the professional personnel.

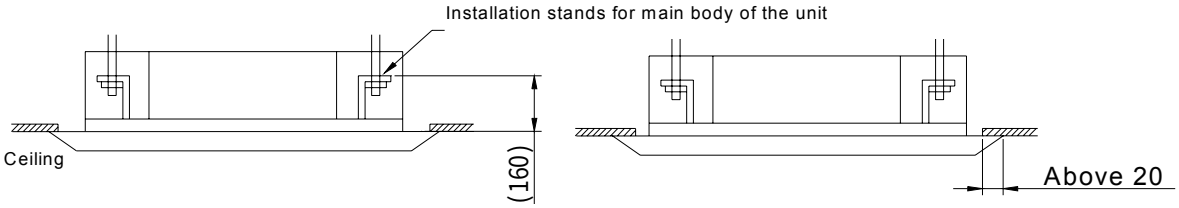

Fig.2

Notes: The dimension for the ceiling openings with * marks can be as large as 910mm. But the overlapping sections of the ceiling and the decorated surface boards should be maintained at no less than 20mm.

● Main body of hoisting air conditioner

1 The primary step for install the indoor unit.

☆ When attach the hoisting stand on hoisting screw, do use nut and gasket individually at the upper and lower of the hoisting stand to fix it. The use of gasket anchor board can prevent gasket break off.

2 Use install cardboard

☆ Please refer to the install cardboard about the dimension of ceiling opening.

☆ The central mark of the ceiling opening is marked on the install cardboard.

☆ Install the install cardboard on the unit by bolt (3 piece), and fix the angle of the drainage pipe at the outlet vent by bolt.

3 Adjust the unit to the suitable install place. (Refer to the fig.2)

4 Check if the unit is horizontal.

☆ Inner drainage pump and bobber switch are included in the indoor unit, check if 4 angle of every unit are horizontal by water lever. (If the unit is slant toward the opposite of the coagulate water flow, there may be malfunction of the bobber switch and lead water drop.)

5 Backout the gasket anchor board used to prevent gasket break off and tighten the nut on it.

6 Backout the install cardboard.

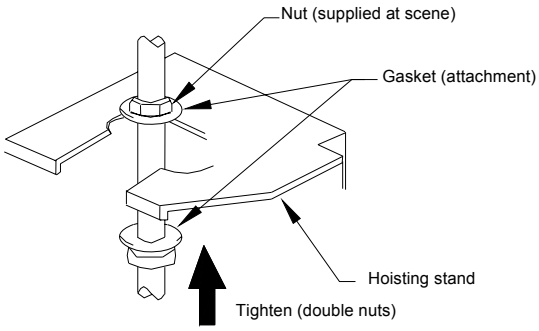

[Fix the hoisting stand firmly]

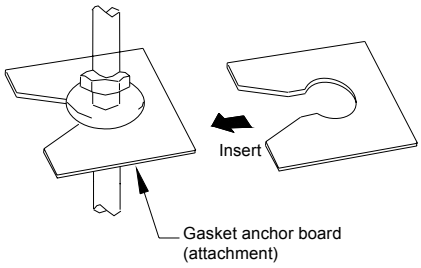

[Fix the gasket firmly]

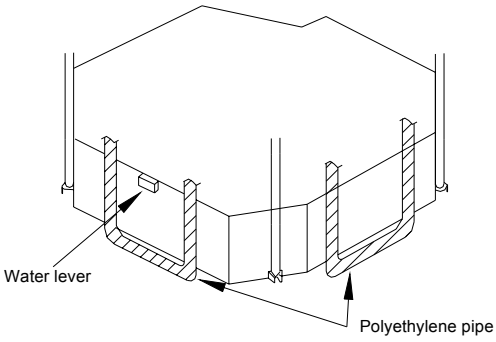

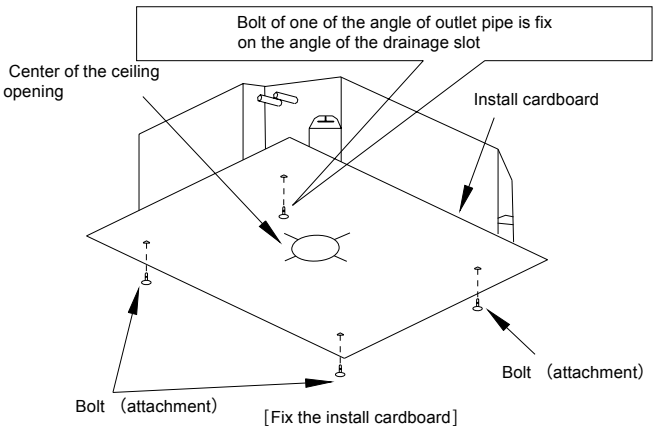

[Fix the install cardboard]

Note !

● ⚠ **se do tighten the nuts and bolts to prevent air conditioner break off**.

● Connect the refrigerant pipe

☆ When connect the pipe to the unit or backout it from the unit, please do use both spanner and torque

wrench. as shown in fig.3.

☆ When connect, smear both inside and outside of the flare nut with freeze motor oil, screw it by hand and then tighten it with spanner.

☆ Refer to form 1 to check if the wrench had been tightened (too tight would mangle the nut and lead leakage).

☆ Examine the connection pipe to see if it had gas leakage, then take the treatment of heat insulation, as shown in the fig.3.

☆ Only use median sponge to entwine the wiring interface of the gas pipe and heat preservation sheath of the gas collection tube.

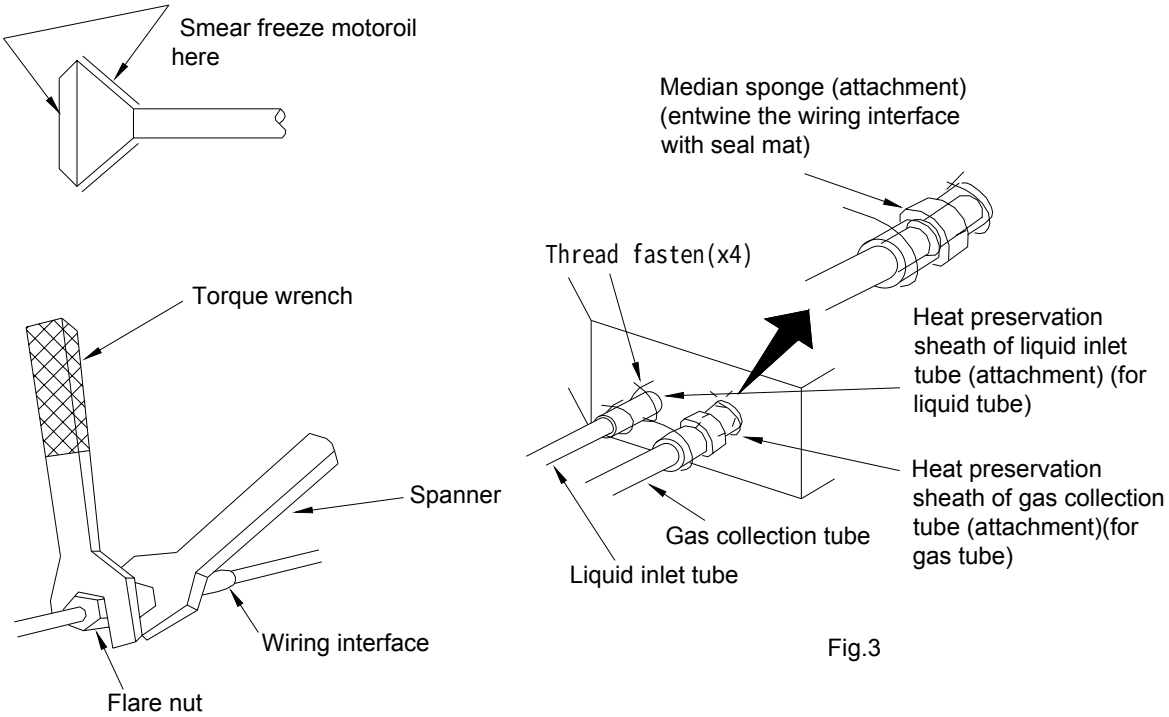

Fig.3

Form 1: The tightening torque needed for tightening nut

Diameter（Inch）	Surface thickness（mm）	Tightening torque (N.m)
ϕ1/4”	≥0.5	15-30 (N · m)
ϕ3/8”	≥0.71	30-40 (N · m)
ϕ1/2”	≥1	45-50 (N · m)
ϕ5/8”	≥1	60-65 (N · m)
ϕ3/4”	≥1	70-75 (N · m)

● Drainage hose

1. Install the drain hose

☆ The diameter of the drain hose should be equal or bigger than the connection pipe's. (The diameter of polythene pipe: Outer diameter 25mm Surface thickness ≥1.5mm)

☆ Drain hose should be short and drooping gradient should at less 1/100 to prevent the formation of air bubble.

☆ If drain hose cannot has enough drooping gradient, drain raising pipe should be added.

☆ To prevent bent of the drain hose, the distance between hoisting stand should is 1 to 1.5m.

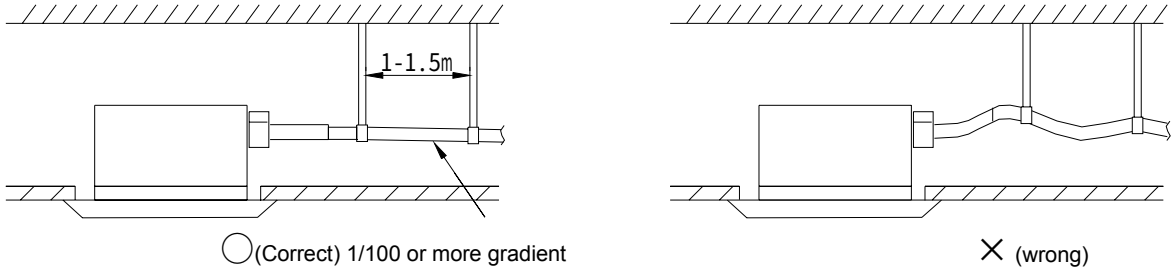

☆ Use the drain hose and clamp attached. Insert the drain hose to the drain vent, and then tighten the clamp.

☆ Entwine the big sponge on the clamp of drain hose to insulate heat.

☆ Heat insulation should be done to indoor drain hose.

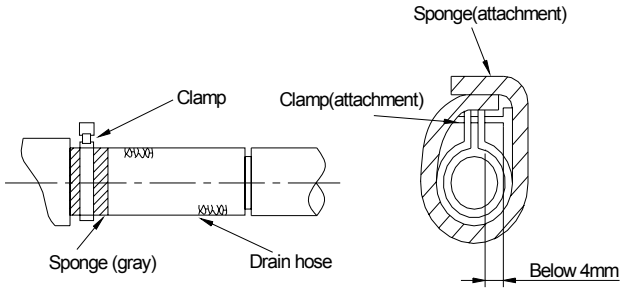

Drain stepup pipe note

☆ The install height of the drain raising pipe should less than 280mm.

☆ The drain raising pipe should form a right angle with the unit, and distance to unit should not beyond 300mm.

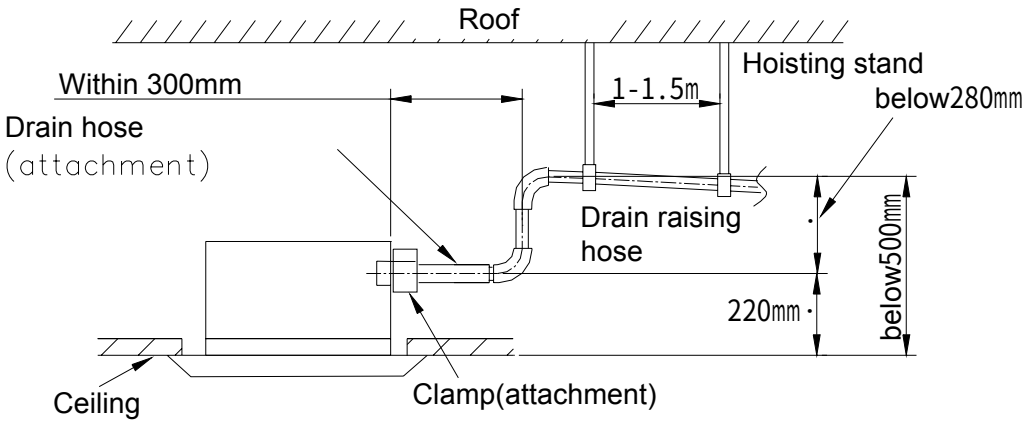

Instruction

☆ The slant gradient of the attached drain hose should be within 75mm so that the drain hole doesn't has to endure the unnecessary outside force.

☆ Please install the drain hose according to the following process if several drain hoses join together.

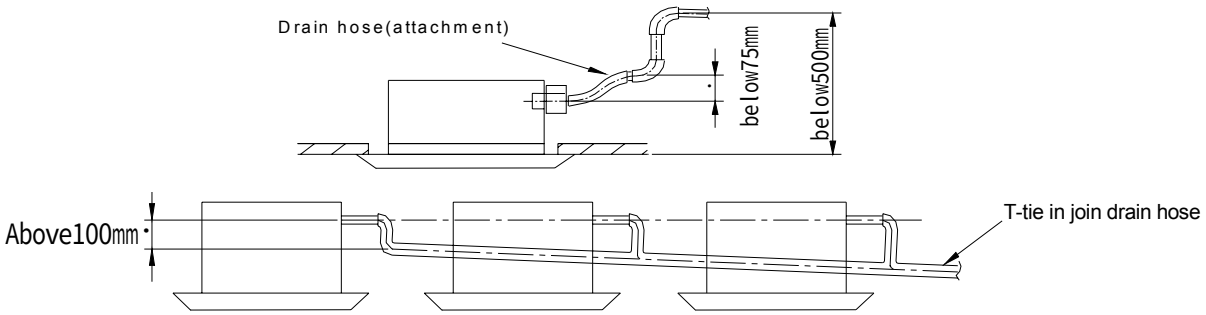

The specs of the selected join drain hose should fits the running capacity of the unit.

2 Check the smoothness of drain after installation.

☆ Check the drain state by immitting 600cc water slowly from the outlet vent or test hole.

☆ Check the drain in the state of refrigerating after installation of the electric circuit.

● Electrical wiring

⚠ Note: The power of the entire indoor unit must be unity power supply

☆ About the electrical wiring, please see the circuit diagram attached with the unit.

☆ All the installation of electrical wiring must be done by professional personnel.

☆ Please do take the earthing treatment.

Wiring method of connection unit and controller

☆ Connection wiring (communication)：

① Open electric box cover, drag the wiring (communication)from the rubber plug A, and impact them well individually by impact fastener.

② Wiring according to the indoor side circuit diagram.

☆ Fix the impact fastener after connection.

☆ Entwine the small sponge on the electric wire (do entwine it to prevent condensation)

☆ Impact tightly by impact fastener after connection and then fit on the electric box.

☆ Connect the 3 cord rubber wire to the counter terminal of the 3 way terminal board.

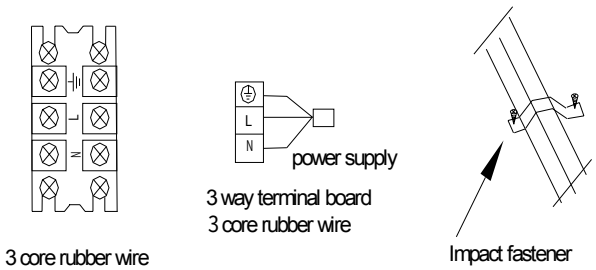

● Function description of functional dial switch S7

1． The 3-bit dial switch must be set before energizing the main board and it determines running state of indoor unit.

2． Function of it is as follow:

Dial switch Silk screen	Function	Dial ON	Dial OFF
1（**S / R**）	Selection of memory mode: A：Selection between reset mode and standby mode after energizing B：This function is available without wired controller.	Standby after energizing	Reset after energizing
2（**L / I**）	Selection between manual controller and receiver A：If manual controller is selected, remote-control function of receiver will be shielded. B：If receiver is selected, wired controller will be non-effective.	Selecting wired controller	Selecting receiver joint
3（**M / S**）	Setting of main and slave indoor units A：For resolution of conflict among the modes. B：This function is available without wired controller.	Main indoor unit	Slave indoor unit

● Install the panel

1. Set the panel to the indoor unit body by matching the position of the swing flap motor of the panel to the piping position of the panel to the piping position of the indoor unit as shown by fig.4.

2. Install the panel

① Screw the 4 hexagon head screws under the latches in about 15mm. (The panel would rise)

② Adjust the panel by turning it toward the direction pointed by the arrow as shown in fig.4, so that the adjust board connect the ceiling well.

③ Tighten the screws until the thickness of the sealing material between panel and indoor unit reduced to 5-8mm.

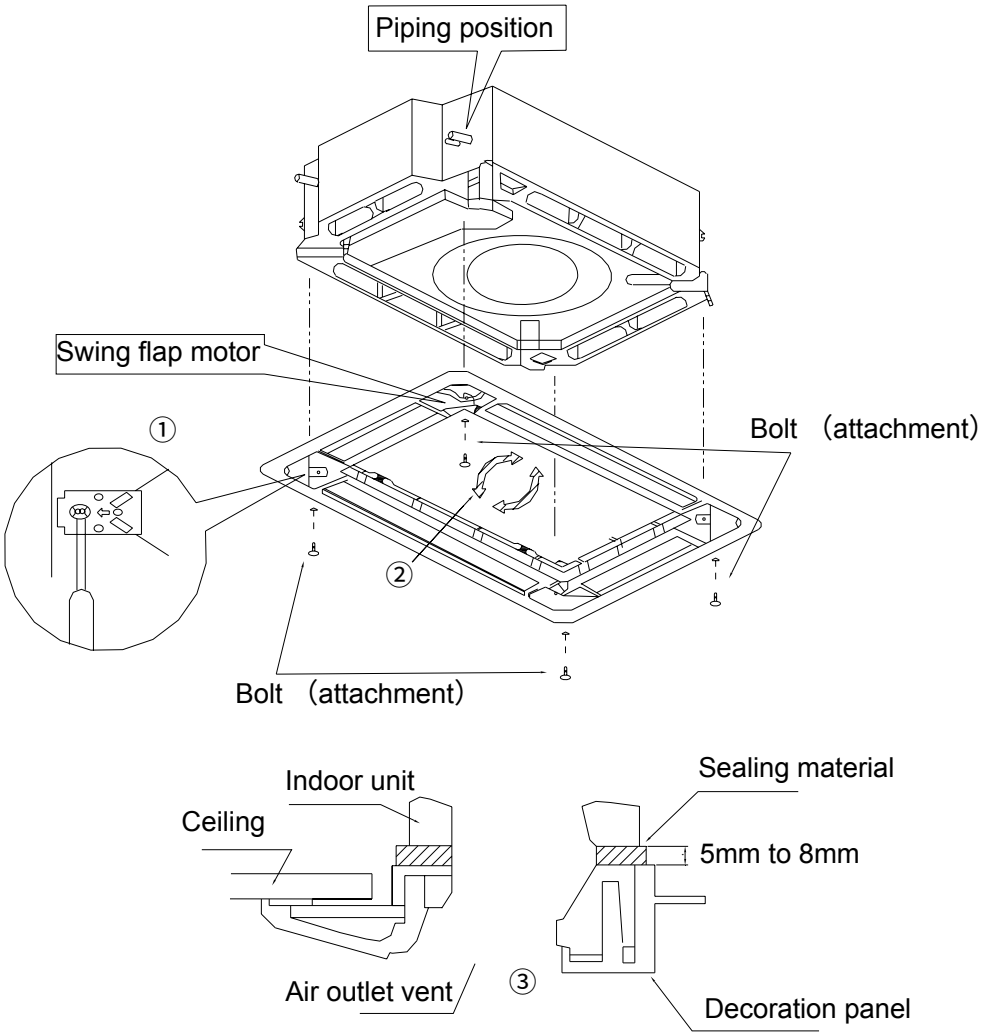

Fig 4

Note

1. Improper screwing of the screws may cause the troubles shown in fig.5.

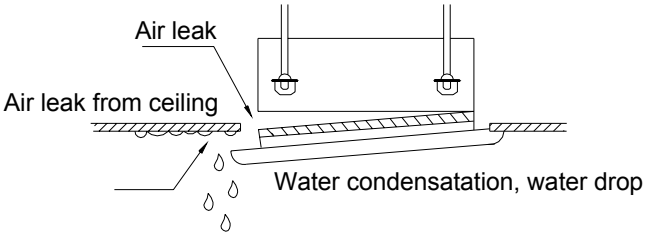

Fig.5

2. If gap still exist between ceiling and decoration panel after tightening the screws, readjust the height of the indoor unit. (As shown in fig.6)

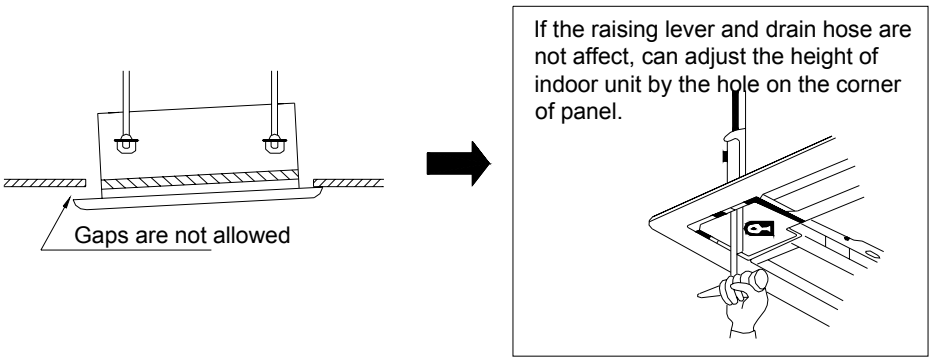

Fig.6

※ After fixing, be sure no gap left between the ceiling and the panel.

3. Wiring of the decoration panel (Fig.7)

☆ Connect the joints for swing flap motor lead wire (at 2 places) installed on the panel.

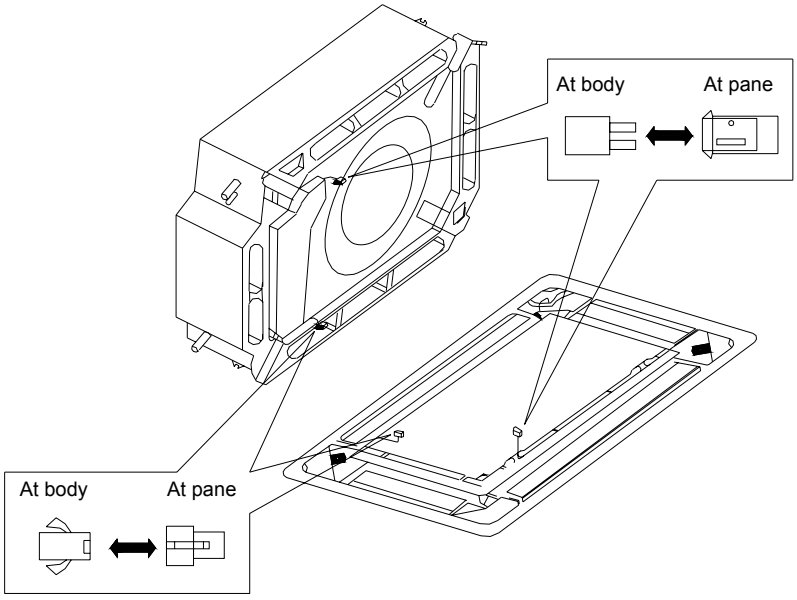

Fig.7

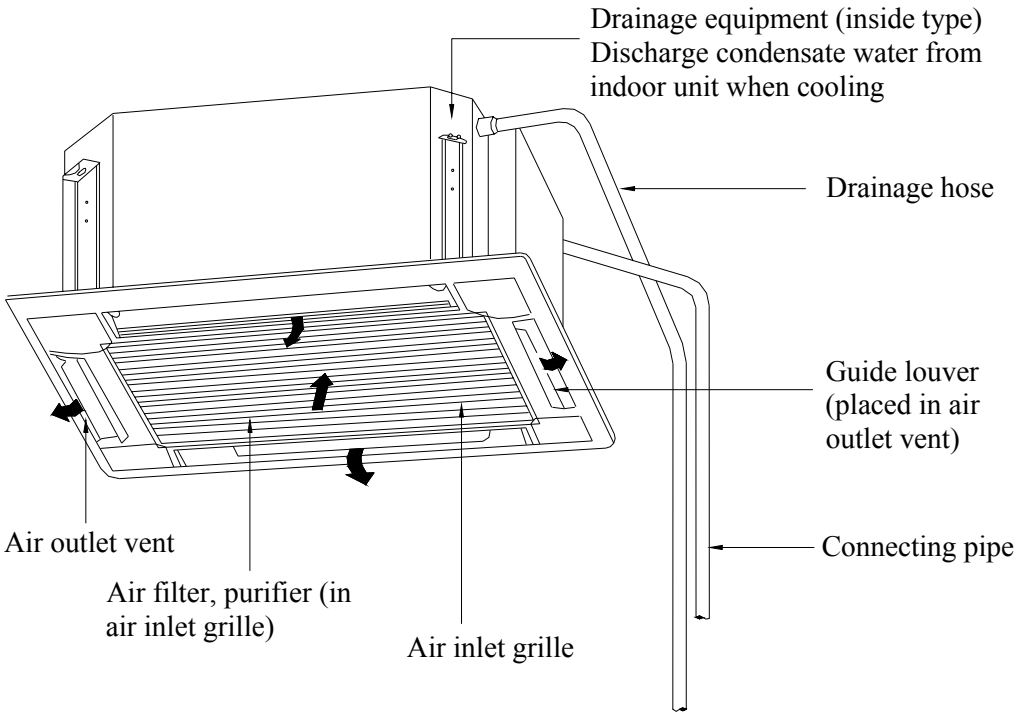

Fig.8

GMV-R22T/NaA-K	GMVL-R22T/ NaA-K
GMV-R28T/NaA-K	GMVL-R28T/ NaA-K
GMV-R36T/NaA-K	GMVL-R36T/ NaA-K
GMV-R45T/NaA-K	GMVL-R45T/ NaA-K

5 INSTALLATION REQUIREMENTS OF REFRIGERANT PIPING

5.1 Specification of refrigerant pipe

R410a refrigerant system			
External Diameter(mm/inch)	Thickness(mm)	External Diameter(mm/inch)	Thickness(mm)
φ6.35	≥0.8	φ22.2	≥1.5
φ9.52	≥0.8	φ25.4	≥1.5
φ12.7	≥1	φ28.6	≥1.5
φ15.9	≥1	φ34.9	≥1.5
φ19.05	≥1		

5.2 Allowable Length and Height Differences of the Refrigerant Piping between the Indoor and Outdoor Units

		Allowable Value	Pipe
		100,120,140,160	
Total Length (Actual Length) of Pipes		150m	$L_1+L_2+L_3+a+b++c+d$
Length of farthest pipe (m)	Actual Length	70m	$L_1+L_2+L_3+d$
	Equivalent Length	80m	
Length of pipe from the 1st manifold to the farthest indoor unit		25m	L_2+L_3+d
Height difference between indoor unit and outdoor unit	Outdoor unit on upper	30m	——
	Outdoor unit at lower	25m	——
Height difference between indoor unit and outdoor unit		10m	——

5.3 Size of Connection Pipe

5.3.1 The size of the pipe (main pipe) from the outdoor unit to the 1st manifold is same as the size of outdoor pipe.

Size of Outdoor Pipe

Item \ Model			GMV(L)-Pd100 W/NaB-K	GMV(L)-Pd120 W/NaB-K	GMV(L)-Pd140 W/NaB-K	GMV(L)-Pd160 W/NaB-K
Connection Pipe	Liquid pipe	mm	φ9.52	φ9.52	φ9.52	φ9.52
	Air pipe	mm	φ15.9	φ15.9	φ15.9	φ19.05
	Connection mode		Flared connection			

Note: If the equivalent length of total t pipe exceeds 90m, the fitting pipe on gas side and liquid side shall be increased of one dimension.

5.3.2 The size of the pipe (branch pipe) between the manifolds is selected according to the capacity of downstream indoor unit to be connected (See Table below). If exceeding the capacity of outdoor unit, the capacity of outdoor unit will prevail.If exceeding the capacity of outdoor unit, the capacity of outdoor unit will prevail.

Total capacity of indoor units	Air pipe	Liquid pipe
C≤50	φ12.7	φ6.35
50<C≤140	φ15.9	φ9.52

140<C≤180	φ19.05	φ9.52

5.3.3 The size of the pipe (indoor pipe) between manifold and indoor unit is same as the size of indoor pipe (See Table below) (If the distance from the first branch to one indoor unit is over 30m, the air pipe and the liquid pipe from the 1st branch to this indoor unit shall be increased by one level).

Capacity of Indoor Unit	Air pipe	Liquid pipe
22,25,28 type	φ9.52	φ6.35
32,36,40,45,50 type	φ12.7	φ6.35
40,45,50 type	φ12.7	φ9.52
56,63,71,80,90,100,112,125,140 type	φ15.9	φ9.52

Note: When the capacity of indoor unit is less than 5KW, if the distance from the nearest manifold to the indoor unit exceeds 10m, the fitting pipe on liquid side of the pipe shall be increased of one dimension.

6 INSTALLATION OF REFRIGERANT PIPING

6.1 Flow Chart of Installation

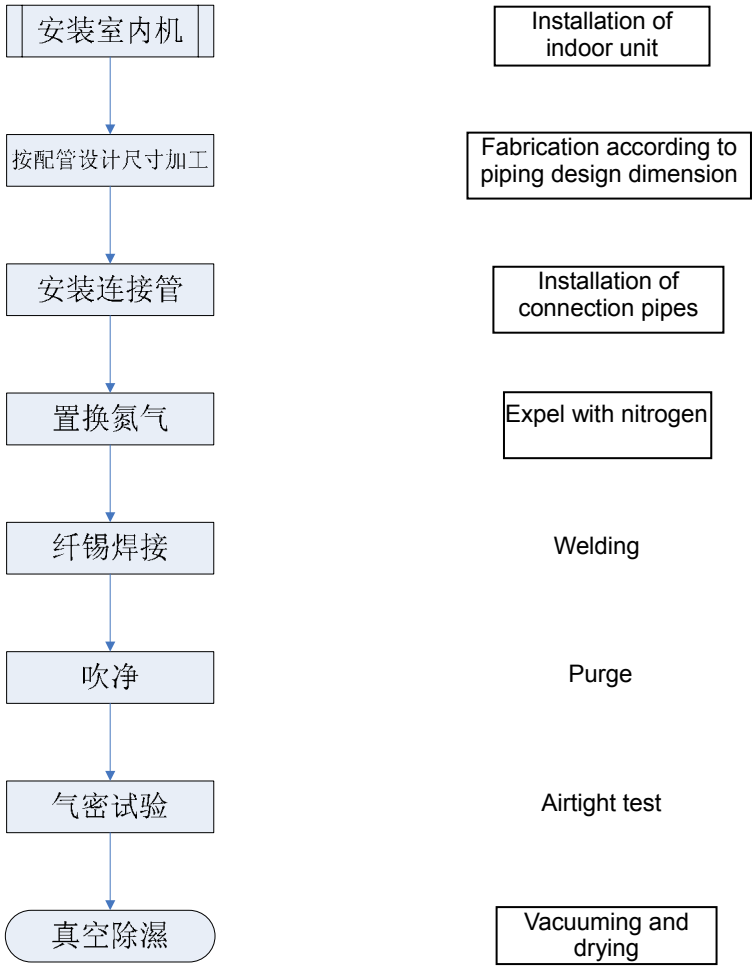

6.2 Three Principles of Refrigerant Piping Installation

Keep to the three principles of refrigerant piping:

	Key Factors	Measures to Avoid Failure
Dry	● Invasion of outside water Example: Rainwater, engineering water ● Invasion of indoor condensate	Fabrication of fitting pipe → Purge → Vacuuming and drying
Clean	● Formation of oxides inside the pipe during welding ● Invasion of dust and foreign articles from outside	Expel with nitrogen 0.05～0.3Mpa Fabrication of fitting pipe Purge
Airtight	● Incomplete welding ● Leakage from flared port ● Leakage from edge	Use suitable materials (copper tube, soldering bar) Observe the basic welding procedures. Observe the basic operations for flaring of fitting pipe Observe the basic interfacing procedures → Airtight test

6.3 Installation of Metal Embedded Pipe

◆ Work Order

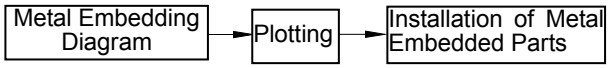

Plot the line on ground if possible and use laser to project it onto the roof. This is quick and correct.

◆ Advance Installation of Metal Embedded Parts

Please select according to local codes.

◆ Subsequent Installation of Expansion Bolts

In case that the metal embedded parts cannot be used due to design change, the expansion bolts may be used.

◆ Subsequent Installation of Expansion Bolts

- The foot pedal shall be supported on three points if exceeding 2m.

  The foot pedal must be fixed securely to the ladder.

- Please do not work on the top of ladder.

6.4 Installation of Carriage of Refrigerant pipin

1) Fixing of horizontal pipe

1）Fixing of horizontal pipe

The refrigerant pipe will extend and shrink with each start or stop of the air conditioner unit (5~10 times / hour). Under a temperature difference of 80°C, this extension may reach 13.84mm for every 10m. To prevent failure, the pipes must be reinforced as follows.

Spacing between supports

Outer diameter of pipe (mm)	6.35-8.52	Over 12.7
Spacing between supports (m)	Below 1.2	Below 1.2

Note: If the gas pipe and liquid pipe are suspended together, the size of liquid pipe shall prevail.

⚠ CAUTION:

Never let the pipe in direct contact with the fixing metal parts. Thermal insulation shall be provided around the fixing metal parts; otherwise, condensing will occur.

2）Fixing of vertical pipe

The vertical pipe may be fixed by using the commodity tools in market or self-made tools. As above, the fixing point shall also be thermally insulated.

3）Fixing of other points

Measures shall be taken to prevent the extension or shrinkage of pipes from causing excessive loads to some positions, machine joint and waterproof points. Generally, such positions refer to the branch pipe joint, pipe ends, four sides of indoor unit and wall-cross hole.

6.5 Management and Machining of Refrigerant Piping

1）Storage

After receiving the refrigerant pipe and other components, do not move them to the storage until confirming that they have no deformation, bend, crack or damage.

The pipe end must be sealed to prevent the invasion of moisture or wastes.

The copper pipe with coating may become deformed under the compression of the coating material, so that the coils shall be placed upright.

To avoid the invasion of moisture or wastes, a support higher than the ground must be built by using woods.

Care of pipe end during construction

The pipe ends must be well cared during construction. According to the working position, work progress and surrounding environment, the most effective way is to seal the end and wrap with adhesive tape.

Sealing method

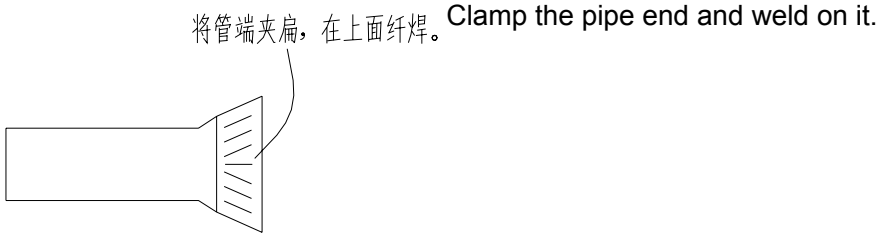

Clamp the pipe end to flat and weld on the clearance. Then, charge nitrogen 2～5kgf/cm^2. This will be more effective.

Method for wrapping with adhesive tape

Seal the pipe end with ethylene tape.

2）Coil unwinding

⚠ CAUTION:

When unwinding the coil, take care not to drag it on the ground. The coil shall be slowly unwound on ground without any twisting. In case of excessive compression by any hard object during unwinding, the thermal insulation materials may be damaged and cannot be recovered, which will deteriorate the performance of thermal insulation. Do not unwind carelessly. Otherwise, the fitting pipe might be flattened.

The copper pipe shall be rounded if the pipe end is deformed.

(The higher the size, the higher the possible deformation)

3）Measuring of pipe

(To reduce the resistance and length of copper pipe), the dimension of main refrigerant pipe shall be so taken that the bends shall be minimized, the radius of bend section shall be increased and the upstream and downstream section shall be reduced. Use the method that can reduce the actual length and equivalent length of the copper pipe.

Sometimes the connection pipe of indoor unit must be adjusted due to the relation with accessories, drainage hose and connection surface. Therefore, a fairly marginal dimension shall be taken.

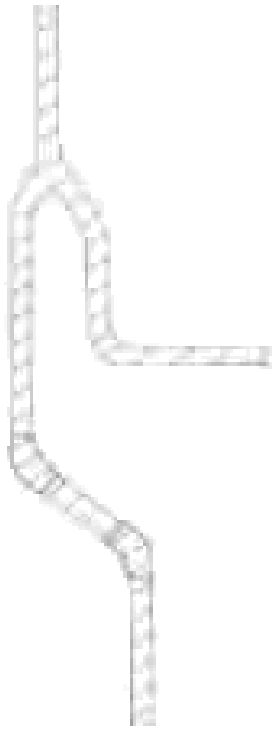

4）Cut·Chamfer

Cut

Cut vertically to axis direction by using special pipe cutter that is suitable to the dimension of copper pipe (big, medium, small).

During operation, press and rotate the pipe cutter slowly and cut off the copper pipe without causing any deformation.

Never use saw or grinding wheel, because the copper scraps may be left inside the pipe. Even use of such tools once will make all works scrapped. It is useless no matter how good the quality of other works. It is best that all operators shall have one pipe cutter and at least one pipe cutter of big dimension shall be provided on site.

⚠ CAUTION:

To prevent the invasion of water or waste, avoid placing the copper pipe directly on ground.

Chamfer

Burrs may occur on the cutting face of copper pipe and must be removed. Meanwhile, purge the foreign articles out of the pipe and refinish the pipe end.]

● Use scraper or other tools to remove the burrs on inner side.

(To prevent copper scraps from falling into the pipe, please keep the pipe end downward during operation).

● If the pipe end is obviously deformed, please cut and throw it off, and then refinish the pipe end.

● Eliminate the copper scraps thoroughly, and use cotton yarn to wipe the pipe clean.

※ The flared joint must be kept smooth.

※ When removing the burrs with scraper, do not remove too much, especially for the fitting pipe of small diameter; otherwise the contact surface of the flared joint will be reduced. Do not cause any scores, and avoid cracking after the flared joint is formed.

※ Adverse impact if the burrs are removed too much with scraper:

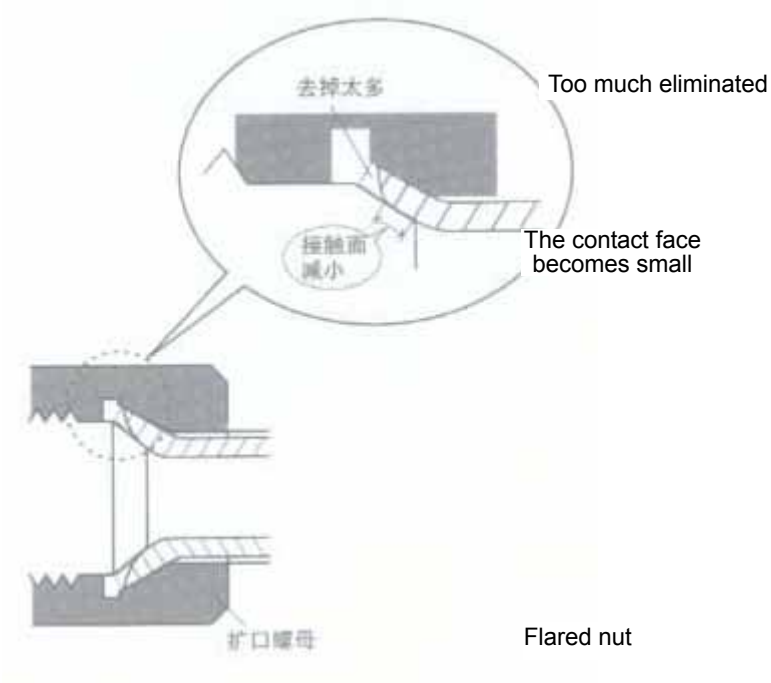

5）Pipe bending

◆ Work Methods:

Bend by hand ……..Suitable to fine copper pipe (φ6.35mm-φ12.7mm).

Machining with spring pipe bender …….. Bend by inserting the spring into copper pipe or sheathing onto the copper pipe (φ6.35mm-φ22.2mm).

Machining with hand-operated pipe bender……Use the pipe bender of suitable dimension (φ6.35mm-φ22.2mm).

Machining with electric pipe bender (hydraulic)……Suitable for mass machining of fine and coarse fitting pipes (φ6.35mm-φ69.9mm).

Advantages

Decrease the weld joint, thus reduce the possibility of leakage and oxidization.

For example:

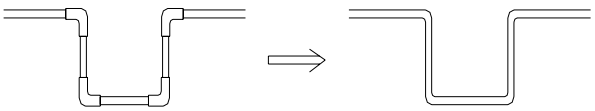

It can decrease the weld by 8 spots. Please act now to improve the quality.

※ No joint is required, which will save the material costs. Reduced waste of fitting pipe materials.

※ Reduced resistance in the fitting pipe. The bending radius higher than the pipe joint.

◆CAUTIONS

※ During bending, there shall be no wrinkling or deformation on the inner side of the copper pipe.

※Spring pipe bend

※ The bender inserted into the copper pipe must be cleaned.

※ Do not bend over 90º. (Otherwise, wrinkling may be formed on the inner side of copper pipe and in the future, the copper pipe will be broken from this position.)

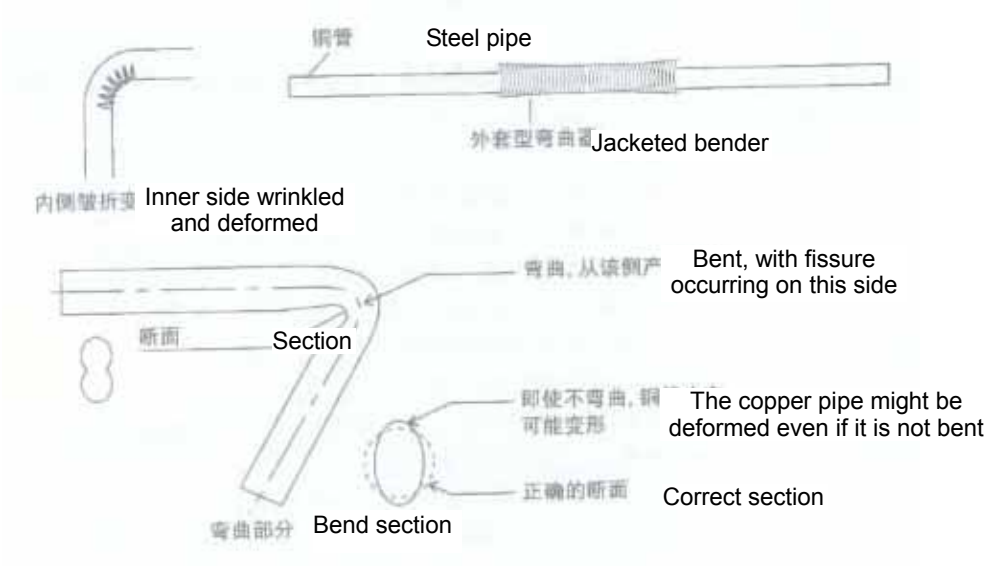

6）Flaring

The flaring refers to expansion of pipe opening. The copper pipe is inserted here to replace the casing pipe. In this way, it is only needed to weld on one position where the pipe is expanded.

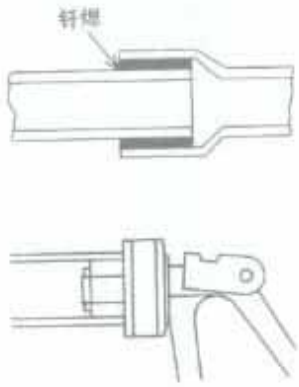

6.6 Installation of Refrigerant Piping

1）Precautions on piping works

At the site of transport, storage and construction, the two ends of copper pipes shall be sealed with plastic sealing caps. Before welding, copper pipes must be cleaned (washing the inner side of pipe with alcohol) to ensure no dust and no water in pipeline.

Nitrogen-filled welding shall be used for the welding of copper pipes. Nitrogen pressure shall be 0.05～0.3MPa. Nitrogen flow can be sensed by hand.

When multiple multi-connected units are installed, refrigerant piping must be marked to avoid confusion between pipes of different units.

A two-way drier shall be mounted at the liquid pipe side at the place where an outdoor unit is connected.

2）Assemble copper pipes

The copper pipe shall be vertically inserted to the specified length. The centerline of two assemblies shall overlap. The position shall be determined for welding. To ensure correct mounting size, do not determine the position with your hands, thus to prevent the copper pipe from moving when heated.

See below for the welding size of copper pipe:

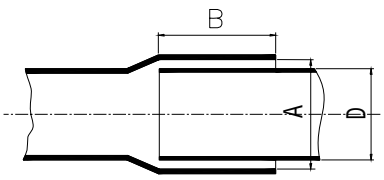

Outer diameter of pipe D (mm)	Min. insert depth B (mm)	Clearance A-D
φ6.35	6	0.05～0.21
φ9.52, φ12.7	7	
φ15.8	8	0.05～0.27
φ19.05, φ22.2, φ25.4	10	
φ28.6, φ31.8	12	0.05～0.35
≥φ35	14	

If the mounting clearance is too large, the diameter of coarse pipe may be reduced to an appropriate value to according to applicable specifications.

3）Installation of branch pipe

The branch pipe plays the function to divert the refrigerant flow. Therefore, the selection and installation of branch pipe is very important to the operation of multi-unit. Based on correct selection of branch pipe, the branch pipe must be installed according to installation specifications.

Connection schematics for Y-type branch pipe

The connection of Y-type branch pipe is as shown below. The inlet is connected to outdoor unit or previous branch; the outlet is connected to indoor unit or next branch.

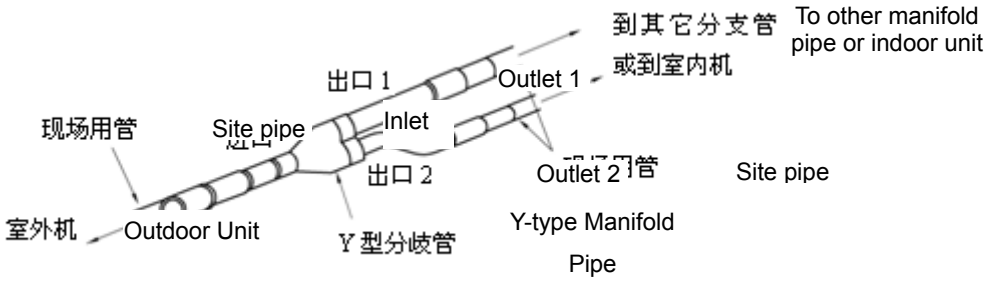

Installation specifications for branch pipe

Placement of branch pipe

The branch pipe can only placed horizontally. Meanwhile, two branch pipes must be on the same plane. The spacing between two branch pipes must be over 800mm, the spacing between two bends must be over 800mm, and the spacing between branch pipe and bend point must also be over 800mm.

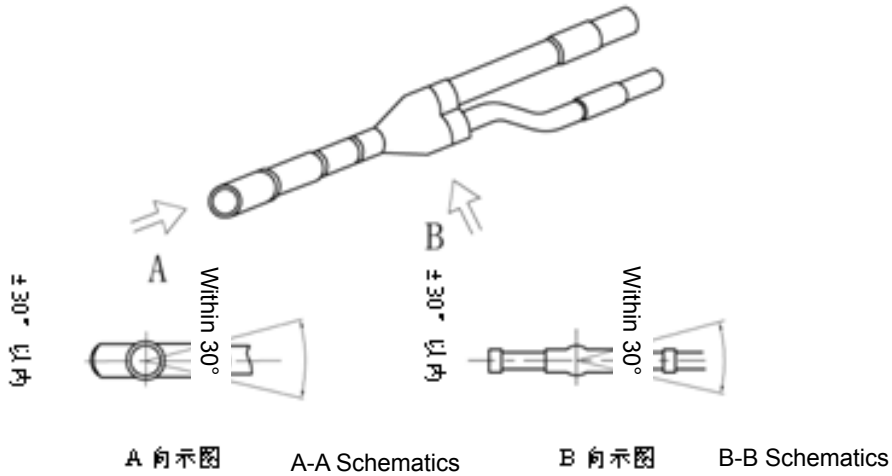

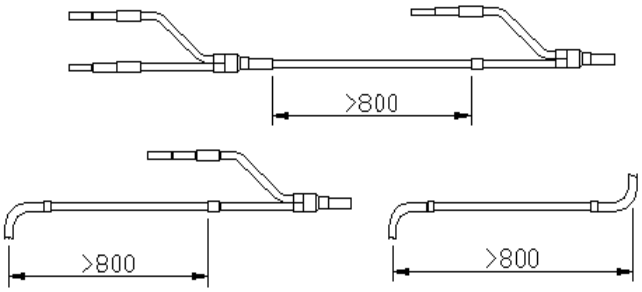

Connection of branch pipe

The Y-type branch pipe is installed with additional tube. The purpose is to adjust the different pipe diameters. If the pipe size selected on site is different from the size of branch connector, please use the pipe cutter to cut from the middle of different connection pipes and remove the burrs. Then, insert the copper pipe to appropriate depth. The branch pipes from Gree are all provided with positioning mark.

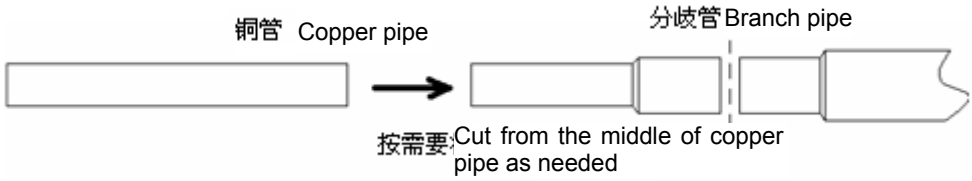

The connection method that copper pipe is in couple with a smaller branch pipe shall not be used:

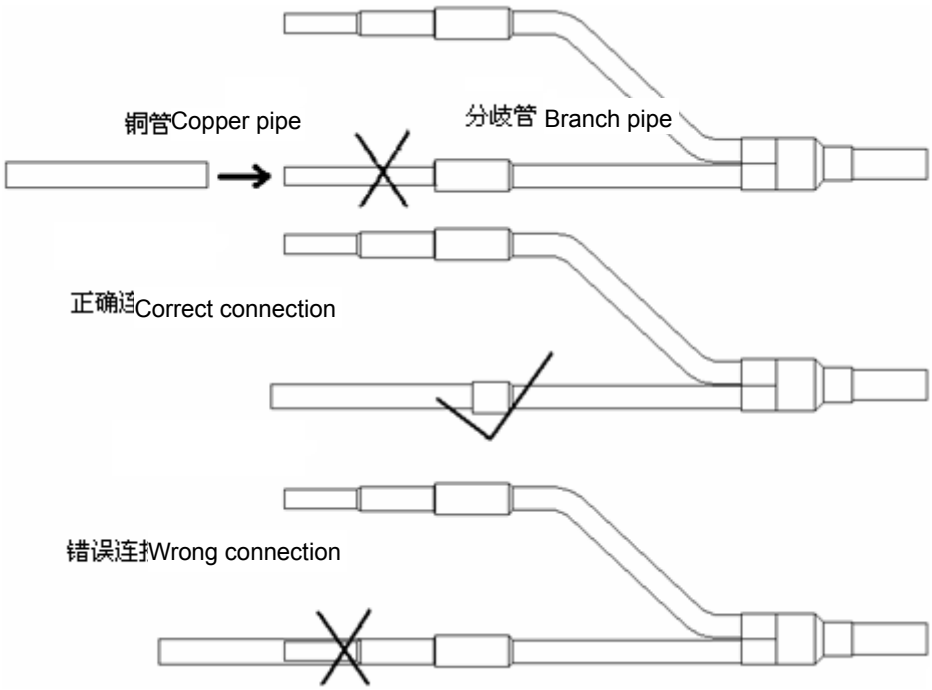

Copper pipe shall not be inserted too much for connection with branch pipe:

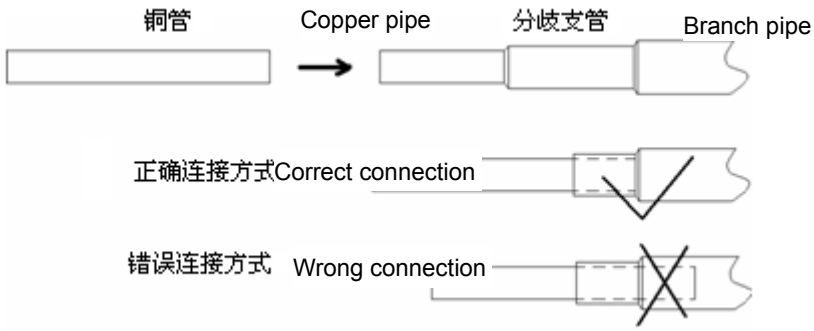

6.7 Welding of Copper Pipe

1）Braze welding

Materials for braze welding

There are two kinds of braze welding, soft braze welding and hard braze welding. Hard braze welding is required in this case.

Selection of braze welding

Red copper + red copper：brazing filler metal is Bcu93P（GB 6418），and welding flux is not needed.

Flame flux: capable of preventing the surface of copper pipes from oxidation, recommended for use

Temperature for braze welding：820-860°C (copper pipe becomes light red)

2）Safety acknowledgement before operation

a. Roll calling of construction personnel and confirmation on their health status.

b. Acknowledgement on work suits（helmets, clothes, safety bags and safety shoes）

c. Description of work location and environment

d. Job division shall be made. Job content, method and order shall be indicated. Risk prediction activities shall be performed.

e. “Construction Schedule” shall be worked out.

f. Head of each group shall be assigned.

g. Risks of occurrence of an accident such as electric shock or fire shall be indicated.

h. Instructions on how to use electric machinery properly shall be available.

i. Locations marked with “Staff Only” shall be indicated.

j. An application is necessary for use of open flame and shall be reviewed by on-site safety officer for approval.

k. Instructions given by fire authorities shall be accepted in accordance with local laws and regulations.

l. Tools shall be sorted and counted. Upon knocking off for the day, tools shall be sorted and counted. If necessary, the piping system shall be charged with coolant to avoid exhaustion.

3）Attention

a. Construction personnel must have relevant operation qualification.

Flame operation must be undertaken by qualified persons in accordance with local laws and regulations.

b. Wear coveralls (cotton for the best), safety shoes, safety helmet, leather gloves, protective goggles and anti-dust mask.

Welding torch with back fire arrestor shall be used to ensure safety.

c. Take care not to be burned by flame and heating parts.

d. Gas cylinder shall be handled carefully to prevent leakage.

e. Combustible substances in the surrounding areas shall be moved away. If movement is impossible, fire proofing treatment shall be taken properly, such as being covered by flame-proof enclosure.

f. Good ventilation is necessary to avoid breathe in of harmful gas.

g. Appropriate measures shall be taken if there is a safety problem.

h. Operation on connectors of branch pipes as well as on the surrounding of pipe ends shall be performed on the ground as possible, because heating is difficult to control at a high place and welded part of a branch pipe is prone to be melted to cause leakage.

For example:

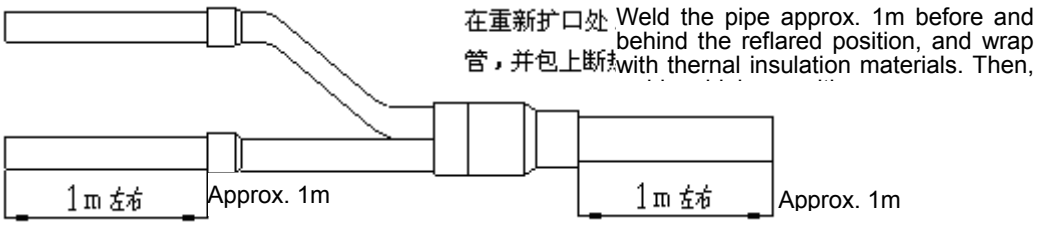

i. To avoid the position difficult to weld, you may add a prefabricated assembly below.

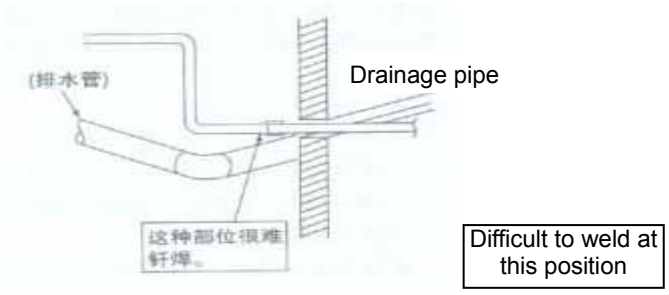

4）Operation order

Basic procedures for welding:

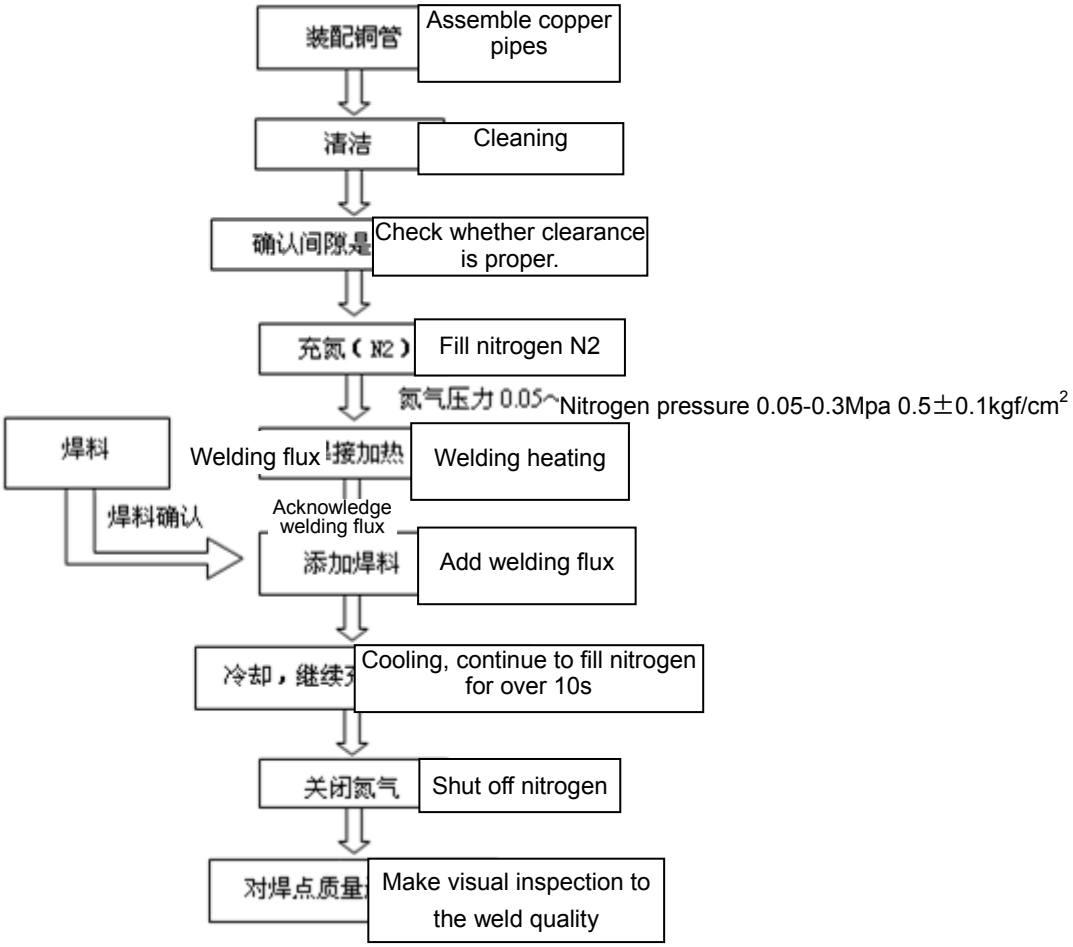

a. Cleaning of portions for braze welding

Polishing……Removing metal materials at connection portion. (Removing oxidation film using non-woven fabric, abrasive cloth or abrasive paper)

Ungrease……If any oil stain is existent, acetone or spirit solvent shall be used for ungrease treatment.

At the same time, compressed air at 0.8MPa (gauge pressure) shall be used for cleaning. The cleaning shall be repeated not less than 3 times, until there is no dirt discharged.

b. Check whether clearance between pipe and connector is proper.

Put the connector into the pipe and face downward. If the connector does not fall down depending on friction force, the clearance is considered proper.

c. Nitrogen-filled protection

● Since vigorous oxidation would occur on the surface of copper pipe at braze welding temperature, to effectively restrain the generation of oxide coating in copper pipe, nitrogen-filled protection for copper pipe is necessary.

● After copper pipes are assembled, nitrogen shall be filled in copper pipe connectors.

● Method for charging nitrogen into copper pipe

Nitrogen charging method：

Pressure is 0.05~0.3MPa. Nitrogen flow of 4~6L/min (gas flow can be sensed by hand) shall be guaranteed to charge in work pieces.

After assembling, nitrogen begins to charge until welding is finished and will continue over 10s during cooling after welding.

※ Main points of nitrogen charge（See the drawing below）

◆ When nitrogen is charged, the press switch on the quick connector and inflator shall be closed to let nitrogen totally filled in the pipe.

◆ Make sure nitrogen reaches all welding connectors in order to effectively discharge air.

◆ A vent port must be available when nitrogen charge is continuously performed, or otherwise gas would escape from gap around connector, making welding stuffing difficult and prone to pores.

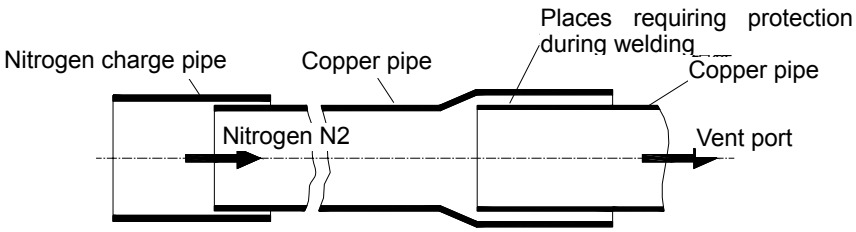

d. Welding heating

Notes:

● Braze welding is flame hard braze welding. Relevant safety operating regulations must be abided by.

● Confirm that nitrogen is flowing through before copper pipe is heated.

● Neutral flame or slightly reducing flame shall be used for red copper braze welding. Outer flame is normally used. Copper pipe connectors shall be heated uniformly. Take care to distribute heat in terms of dimension of pipe material. Generally, insert pipe shall be preheated at first for close matching and then swayed along length of connector to make it heated uniformly until braze welding temperature is approached; then copper pipe is heated circularly to reach braze welding temperature (copper pipe becomes light red) and at the same time brazing filler metal is added circularly to fill in the clearance around the connector uniformly; and afterwards, the welding torch is slowly moved away from the pipe and a small amount of brazing filler metal continues to be filled in until smooth fillet is formed.

● During heating, welding rod shall not be burned directly by flame. Heating time shall not be very long.

● During welding, flame shall be controlled well on its direction and kept away from rubber casing, sponge and cables.

e. Post-welding treatment（cooling）

● After welding, in the condition of nitrogen protection available, the connector shall be heated until the copper pipe changes color (200-300°C), i.e. annealing treatment.

● Before welding seam becomes completely solidified, welded pieces shall not be moved or shocked.

● For welded piece cooled by water, take care not to let water enter into copper pipe and try to prevent residue water flowing into the pipe when welded piece is laid aside.

f. Quality and inspection of braze welding

Welding seam should have smooth surface. Fiilet should be even and full with natural arc transition. Braze welding connector should be free from defects such as over-burning, welding blockage, crack, rough surface of welding seam and burning through. Welding seam should be free from defects such as pore, slag inclusion, underfill, rosin joint and overlap.

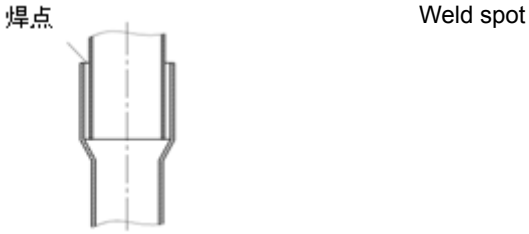

5）Others

◆ When braze welding is to be performed underneath, a simple support shall be built, such as two ladders.

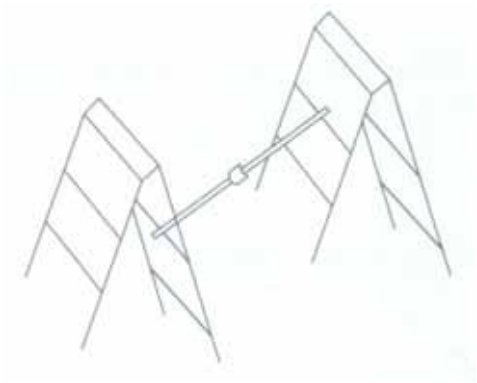

◆Braze welding shall be easy to operate downward or in transverse direction. In upward operation, brazing filler metal is prone to fall so that high skills are required.

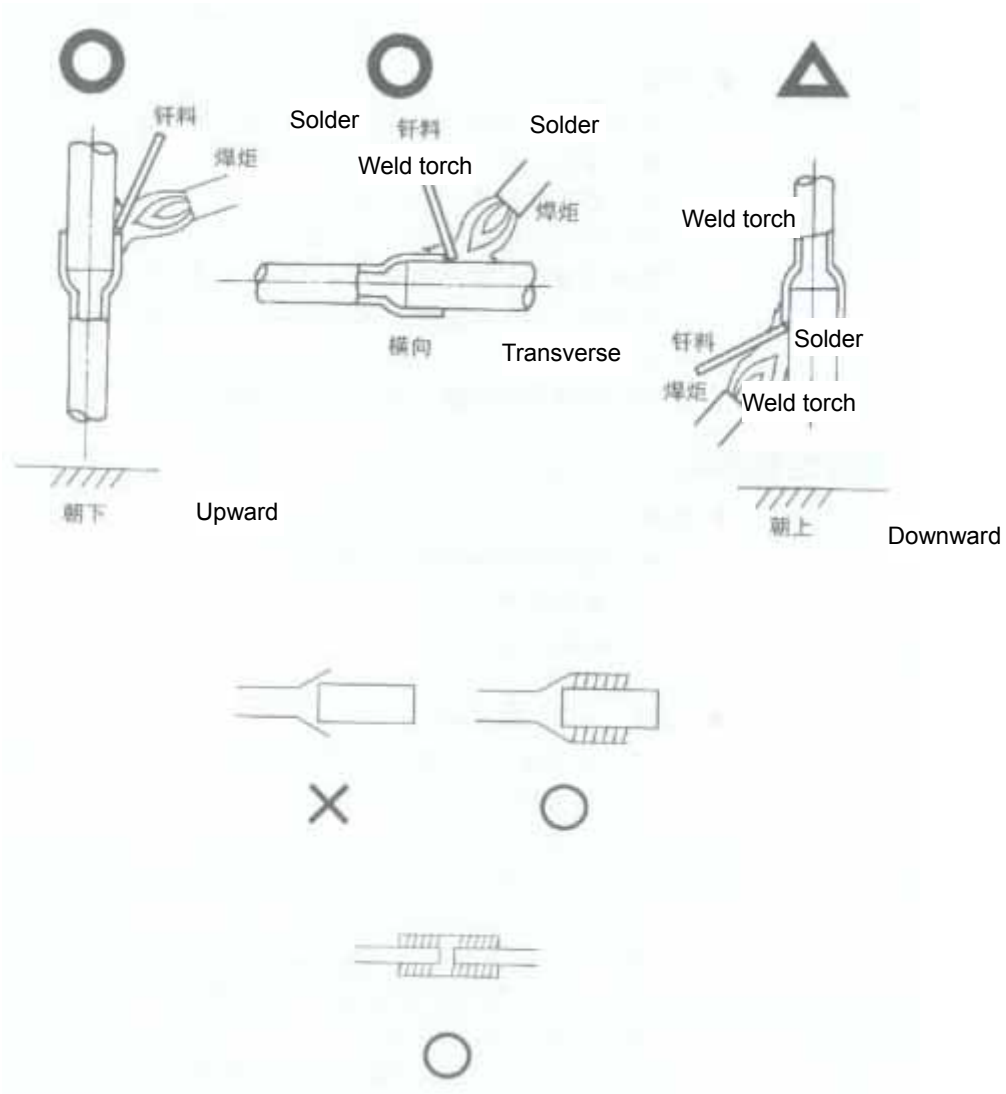

◆Cooling

To avoid getting a burn in following processes, common wet cloth (humidity content is low, meaning that there shall not be water drips when welded part is cooled; and because shrinkage factor of copper is different from that of welding material, too quick cooling that would cause cracking of braze welding shall be avoided) can be used for cooling welded parts.

◆The following items shall be checked after welding is completed

● Is there any pore or hole on welded part?

● Is there evident “sagging of brazing filler metal”?

6.8 Cleaning of Refrigerant Piping

After a section of pipeline is welded, cleaning of piping is necessary.

Nitrogen pressure is utilized to remove foreign matters (such as dust, water and beryllium oxide caused by welding) in the piping.

1）Main purposes of cleaning are as follows：

To eliminate oxide caused by insufficiency of nitrogen-filled protection during pipe welding.

To remove foreign substances and water that may enter the piping due to improper storage and transport.

To check whether big leakage is existent at connections of the piping between indoor unit and outdoor unit

2）Cleaning steps：

a. Mount a pressure gauge on nitrogen cylinder;

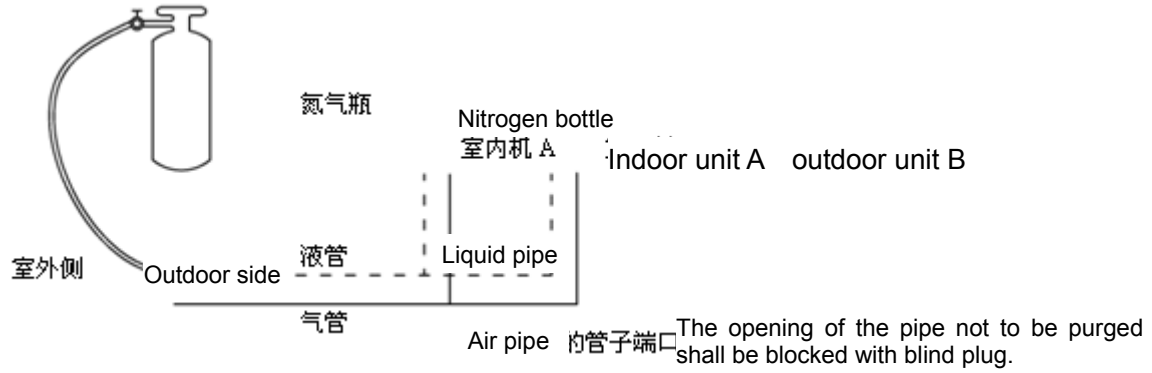

b. High pressure end of the pressure gauge is connected to the refrigerant filling nozzle of the small pipe (liquid pipe)

c. All copper pipe ports outside the A side of indoor unit shall be blocked by blanking plugs.

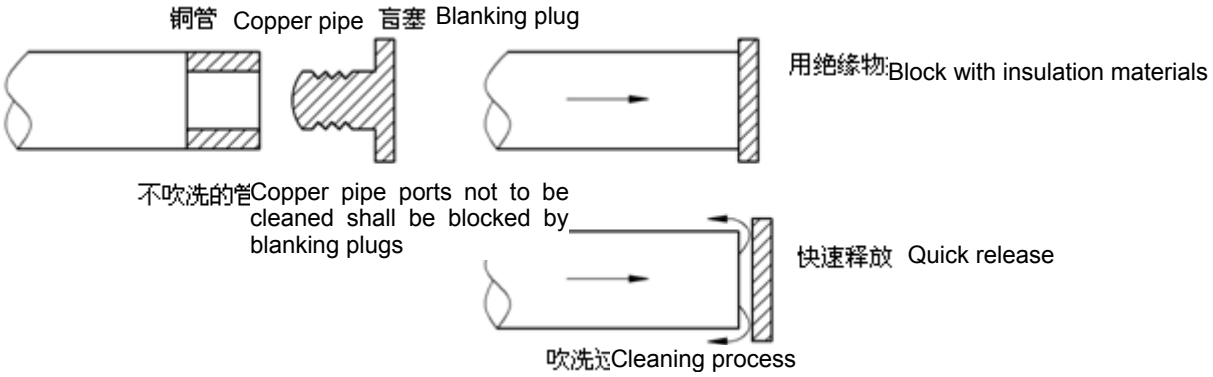

d. The valve on nitrogen cylinder shall be opened to maintain pressure at 28Kgf/ cm^2

e. Check whether nitrogen flows through the liquid pipe of indoor unit A

f. Cleaning

The mouth of the pipe shall be blocked with insulation material held by hand until pressure rises to a level difficult to be withstood, and at the moment the insulation material shall be released quickly. And then the mouth shall be blocked again. Repeat such procedures several times. Afterwards, use a wood board posted with white paper to check it. If there is not evident dirt on the white paper, the pipe will be considered clean.

g. Shut off the main valve of nitrogen

h. Repeat the above procedures on indoor unit B

i. After cleaning of liquid pipe, gas pipe shall be cleaned in the same way.

6.9 Pressure Maintaining and Leak Hunting

1）Pressure maintaining of refrigerant piping

After refrigerant piping of a system is welded

A refrigerant filling nozzle shall be welded respectively on the big pipe and on the small pipe on the outdoor unit side.

Pipes connected to the end of indoor unit and outdoor unit shall be clamped to be flat and welded to be sealed.

Steps of pressure maintaining and leak hunting of refrigerant piping are as follows:

Operating Steps:

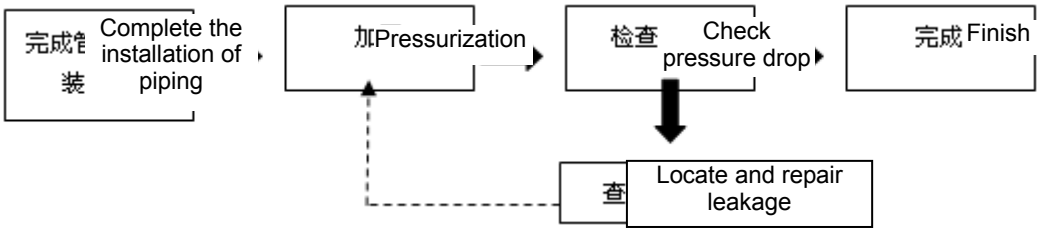

◆ Pressurization

Use nitrogen to add pressure from Freon nozzle of the gas and liquid pipe on outdoor unit side:

Step 1: Increase the pressure to 0.5MPa and wait for 5 minutes or longer

Step 2: Increase the pressure to 1.5MPa and wait for 5 minutes or longer

The step 1 and 2 are focused on checking the significant leakage point. If any, reweld immediately or repair the leakage point.

Step 3: Increase the pressure to 4.15MPa and keep it for approx. 24 hours to check the small leakage.

Though the pressure is increased to 4.15MPa, it cannot be guaranteed to find out the small leakage if the waiting time is too short. Therefore, the pressure in Step 3 must be kept for 24 hours.

Note: During pressure maintaining after nitrogen is filled, the pressure gauge shall not be dismantled, because activities of dismantling or mounting pressure gauge would affect pressure change.

◆Check pressure drop

Criteria for Inspection eligibility:

※ Except for temperature influences (pressure changes about 0.01MPa for temperature change of 1°C), if pressure drop is not more than 0.02MPa within 24h, the system will be eligible. For example, nitrogen is filled to reach 2.5MPa at 30°C; after 24 hours, when temperature becomes 25°C, the system will be eligible if pressure is over 2.43 MPa and ineligible below 2.43 MPa.

※ If ineligible, leak sources must be located. After leak sources are found, re-welding or repair welding is necessary. Then, the above procedures shall be repeated. Nitrogen is filled, pressurized and maintained until pressure drop remains within required range.

◆Leak check

[Check 1] When pressure drop is found, leak hunting shall be performed in the ways as follows:

a. By ears…….to listen voices related to leakage

b. By hands……to sense whether leakage is existent at connecting parts

[Check 2] If no leakage is found using the above methods, nitrogen shall be discharged and refrigerant shall be filled in to reach 0.5MPa.

a. By soap and water……soap bubbles will show leakage positions if any.

b. Detector (such as halide detector) can be used for leak hunting

Using the above methods, check all possible leak sources.

If leakage still fails to be located, sectional check shall be taken for refrigerant piping that would be divided into multiple check portions for locating leak source in a certain section.

2）Pressure maintaining and leak hunting of the system（with refrigerant piping in connection with indoor unit and outdoor unit）

When refrigerant piping is to be installed, pressure maintaining and leak hunting is required for the piping. After refrigerant piping is in connection with indoor unit and outdoor unit, pressure maintaining and leak hunting is also required. The purpose of the test is to check whether any leak is existent at threaded connection of indoor unit and outdoor unit and at new welded points.

Steps:

◆Nitrogen is charged to reach 4.15MPa and remains at the pressure for 24h (nitrogen shall be filled from refrigerant filling nozzles at the big valve as well as the small valve using a pressure gauge; during pressure maintaining after nitrogen is charged, the pressure gauge shall not be dismantled.)

◆ 2Observe whether pressure changes in 24 hours. (for eligibility criteria, see pressure maintaining and leak hunting of refrigerant piping in 5.5.2)

◆If any leakage, please check threaded connections and new welded spots of indoor unit and outdoor unit. Repair welding shall be performed immediately. Afterwards, pressure maintaining is repeated until eligibility is reached.

2）Cautions:

a. The range of pressure gauge for R410A system test shall be over 4.5Mpa；

b. At the same time, record the readings on pressure gauge, ambient temperature and test time;

c. Pressure correction: The pressure will change by 0.01Mpa with temperature changing by every 1℃；

d. It is only acceptable when the pressure is kept unchanged;

e. To keep the pressure for a long time, the pressure shall be decreased to 0.5MPa or lower. High pressure of a long time might cause leakage at the weld and result in safety risk.

f. Before completing the airtight test of refrigerant pipe, never carry out thermal insulation or wrapping work at the weld and flared connection of indoor unit. The pressure shall be simultaneously applied from the pipes on outdoor side. Never apply pressure from a single side；

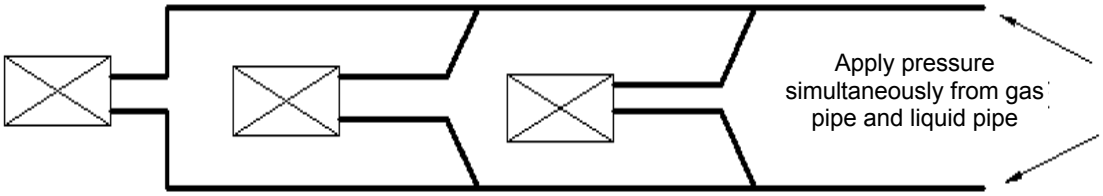

1.4 Caution: Before completing the airtight test of refrigerant pipe, never carry out thermal insulation or wrapping work at any weld.

6.10 Heat Preservation of Refrigerant Piping

1） Connection of thermal insulation pipe

Carry out thermal insulation to the refrigerant pipe after confirming that it has no leakage.

Please perform thermal insulation to the refrigerant pipe according to the steps below

◆Check if the thermal insulation pipe has met the thickness requirements. If not, the condensing water is easy to attach on thermal insulation pipe and finally drips. The thickness requirements are shown below:

Refrigerant Pipe (mm) (Outer Dia. x Thickness)	Thickness of Thermal Insulation Materials (mm)
Φ6.35×0.5	≥10
Φ9.52×0.71	≥10
Φ12.7×1	≥15
Φ15.9×1	≥15
Φ19.05×1	≥15
Φ22.2×1.5	≥20
Φ25.4×1.5	≥20
Φ28.6×1.5	≥20
Φ34.9×1.5	≥20

◆Wrap the refrigerant pipe according to required thickness. The clearance between thermal insulation pipes shall be sealed with self-adhesive sticker.

◆Wrap the thermal insulation pipes with tapes, thus to extend their ageing time.

2）Cautions:

The thermal insulation materials shall be able to withstand the pipe temperature. For heat pump

unit, it is required to withstand a temperature not lower than 70°C on liquid pipe side and not lower than 120°C on gas pipe side. For cooling-only unit, it is required to withstand a temperature not lower than 70°C on both liquid pipe side and gas pipe side.

Example: Heat resistant PVC foam (over 120°C); Foam PVC (over 100°C)

The connector between indoor unit and outdoor unit shall be wrapped with thermal insulation materials, and shall have no clearance to the wall on which the outdoor unit is mounted, as shown below.

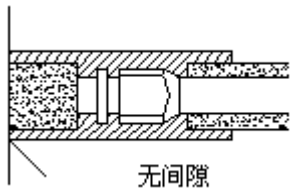

No clearance

When wrapping the thermal insulation tape, each circle shall suppress half of the previous circle. To avoid reducing the thermal isolation effect, do not wrap the tapes too tight.

After completing the protection work and wrapping the pipes, use the sealing materials to block the holes in the wall.

6.11 Vacuum Pumping

1） Purposes of vacuum pumping

Discharge air and nitrogen in the piping to obtain vacuum state.

Vacuum is dry, capable to remove moisture in the system.

Under atmospheric pressure, the boiling point of water is 100°C. But with increased vacuum degree created by vacuum pump, the boiling point rapidly reduces. If boiling point reduces below ambient temperature, moisture in piping will be evaporated. If vacuum is 0Kgf/cm^{2}of absolute pressure (gauge pressure is -1Kgf/cm^2), moisture in the system can be evaporated totally

2）Selection of vacuum pump

Proper vacuum pumps must be selected before vacuum pumping. Insufficient capacity of selected vacuum pump would lead to overtime of vacuum pumping and fall short of the requirement for vacuum degree. A proper vacuum pump can obtain vacuum degree of 0Kgf/cm^2 (gauge pressure -1 Kgf/cm^2) after vacuum pumping

Features of a vacuum pump shall be determined by two factors as follows:

Selection of a pump that can meet expected requirement (i.e. gauge pressure of -0.1MPa shall be obtained)

Exhaust flow is high (over 40L/min)

The following vacuum pumps are recommended.

Model	Maximum vacuum air displacement	Use	
		Air discharge	Vacuum drying
Lubricant shaft pump	100L/min	Suitable	Suitable
Non-lubricant shaft pump	50L/min	Suitable	Suitable

Comparison table of different pressure units is as follows:

	Unit	Standard air pressure	Vacuum degree
Relative pressure	kg/cm^2	0	-1.033
Absolute pressure	kg/cm^2	1.033	0
mm Hg	mmHg	0	-755

3）Vacuum pumping

The steps are as follows:

a. Expel the nitrogen after leakage detection;

Connect the pressure gauge to Freon nozzle on outdoor liquid valve and gas valve, and connect a vacuum pump. Then, establish vacuum simultaneously from high pressure side and low pressure side.

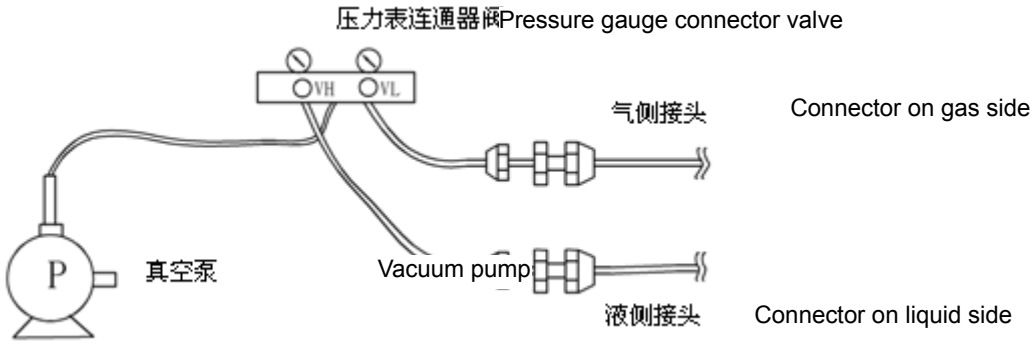

Start the vacuum pump and turn on “L_O” and “H_I” knobs

b. Continue for 0.5~1.0 hour after the vacuum level reaches -0.1MPa (gauge pressure -1kgf/cm^2). Then, close the “VH” knob on high pressure end and “VL” knob on low pressure end to stop the vacuum pump.
c. Remove the hose connected to vacuum pump and reconnect it to the refrigerant tank. Expel the air in the hose. Open the “VL” knob on low pressure end to charge refrigerant to the system piping. When the pressure reaches 0.0kgf/ cm^2, close the “VL” knob on low pressure end.
d.Remove the hose connected to refrigerant tank and reconnect it to vacuum pump. Start the vacuum pump and open the “VH” knob on high pressure end. Pump for 30 minutes from high pressure end and then open the “VL” knob to pump from low pressure end, until the vacuum level reaches -0.1MPa（gauge pressure -1kgf/cm^2）.
If the vacuum level reaches -0.1MPa (gauge pressure) or lower, the vacuuming process is then ended. Stop the vacuum pump and place still for 1 hour. Then, check the vacuum level for any change. n case of any change, it indicates that there is leakage. In this case, proceed to leakage detection and repair.
e. Complete the vacuuming according to above procedures and then proceed to charging of additional refrigerant

6.12 Refrigerant Charge

1）Calculation method for refrigerant charging

Refrigerant shall be charged according to calculated amount specified in engineering drawings.
Method for calculation of added refrigerant volume (based on liquid pipe)
Mass of refrigerant to be charged =∑ length of liquid pipe × refrigerant charge amount of every meter of liquid pipe.

Medium	Amount of refrigerant charge for every meter of liquid pipe（kg/m）					
	Φ22.2	Φ19.05	Φ15.9	Φ12.7	Φ9.52	Φ6.35
R22	0.41	0.29	0.187	0.12	0.06	0.03
R410a	0.35	0.25	0.17	0.11	0.054	0.022

Note: a. Standard pipe length is 15m. If refrigerant piping (L) is shorter than or equal to 15m, no additional refrigerant is needed. If piping is longer than 15m (based on liquid pipe), more refrigerant shall be added. The above table shows how much refrigerant shall be charged for every one additional meter of piping.
b. Electronic balance shall be used for refrigerant charge
c. Thickness of pipe wall shall be 0.5～1.0mm and pressure-bearing capability shall be 3.0MPa
d. The longer the piping, the more refrigerating capacity and heating capacity shall be weakened.

2）Steps of refrigerant charge are as follows：

a. The connecting hose of refrigerant cylinder shall be connected to the connector of the pressure gauge. The valve V_H shall be opened to discharge air in the hose. Then, the high pressure end of the pressure gauge shall be connected to the refrigerant filling nozzle on the small valve of outdoor unit.

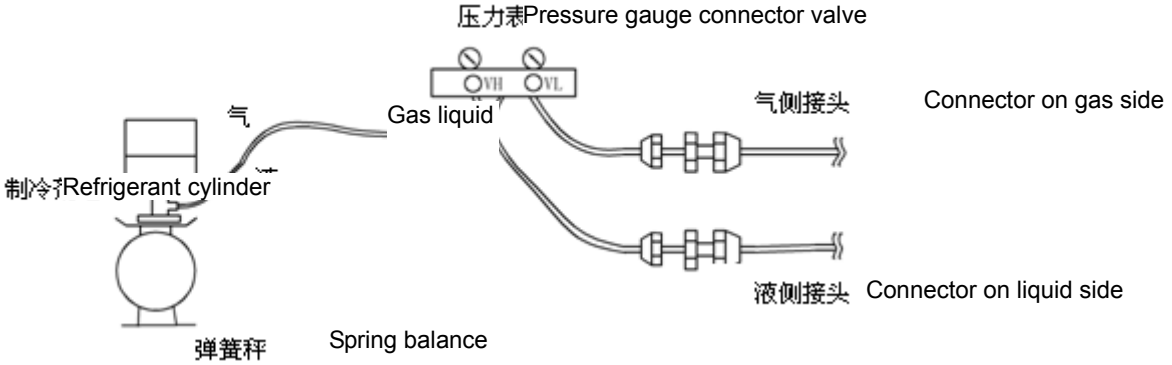

b. Open pressure gauge valve V_H, then fill liquid state refrigerant into the liquid pipe side until required amount is reached.

If refrigerant can not be charged in system unless the unit is turned on, let the system run at full-load cooling mode. Open V_H and discharge air in the hose. The high pressure end of pressure gauge is connected to the refrigerant filling nozzle on the small valve of outdoor unit. Open V_L and charge gas state refrigerant into the gas pipe until required charging amount is reached.

c.Observe electronic balance or spring balance. When required amount is reached, the valve shall be closed very quickly and then source valve on the refrigerant valve shall be shut off.

d. The amount of charging refrigerant shall be recorded.

Refrigerant charge shall be recorded as per the following table.

Unit Mark	Amount of charging refrigerant（Kg）
Unit 1	
Unit 2	
……	
Unit n	

7 INSTALLATION OF ELECTRONIC EXPANSION VALVE ASSY

7.1 Direction Requirements

To ensure normal operation of the unit, please connect the electronic expansion valve sub-assembly as shown below.

Ensure that the vertical arrow labeled on electronic expansion valve sub-assembly is pointed upward.

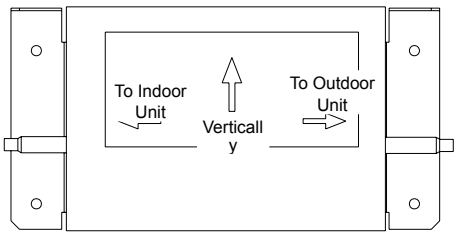

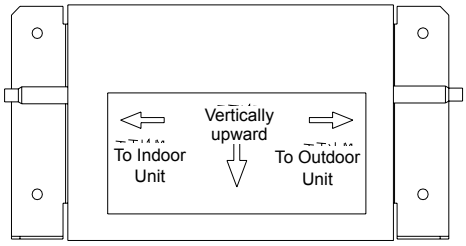

√**Arrow Upward** **X Arrow Downward**

（1） Firstly, fix the electronic expansion valve sub-assembly properly. Several operating methods are available:

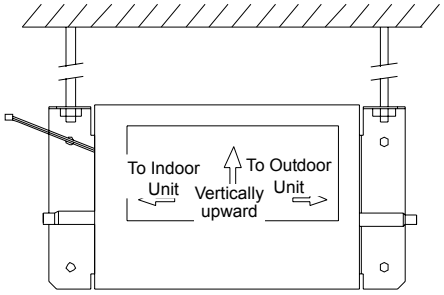

Suspend by using screw rod

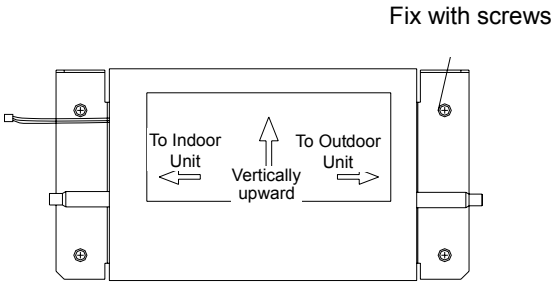

②Use screws to fix onto wall

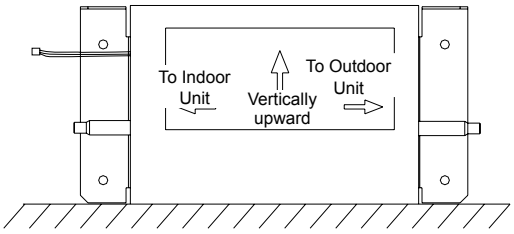

③Directly place on ceiling plane

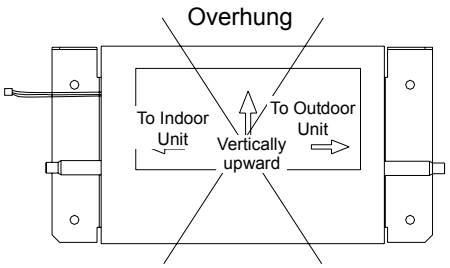

⚠ Caution: Never place overhung in air.

The indoor unit shall be firstly connected to a section of pipe (connected by nut). Then, connect the pipe to the electronic expansion valve sub-assembly (by welding).

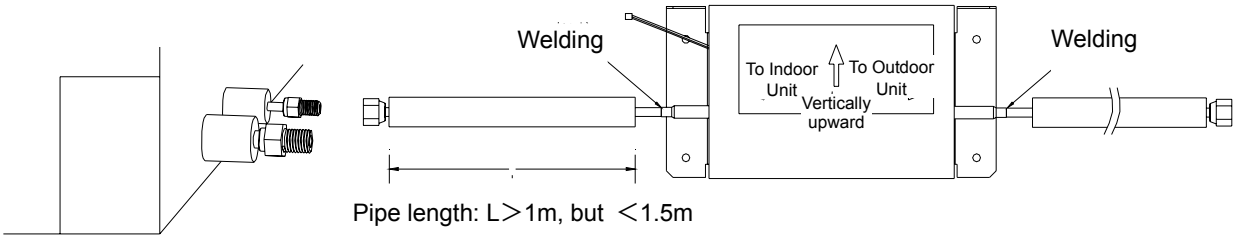

⚠ **WARNING: The length of connection pipe must be 1m≤L≤1. 5m. The electronic expansion valve sub-assembly must be connected to the indoor and outdoor unit in a direction as marked. If connected in reverse direction, severe error will be caused to the unit.**

(2) Pipe connection: Tighten the nuts with your hands correctly. Then, use another spanner to hold the pipe joint on machine side and use torque wrench to tighten securely.

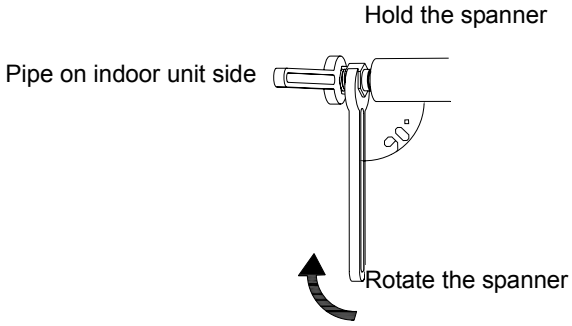

(3) Cable connection of electronic expansion valve sub-assembly

① To avoid loosening and sagging down, please use strap (small) to fix the cable of electronic expansion valve sub-assembly onto the pipe or other objects.

② When connecting the cable of electronic expansion valve sub-assembly, please take care to prevent the cable from contact with the hot or humid objects.

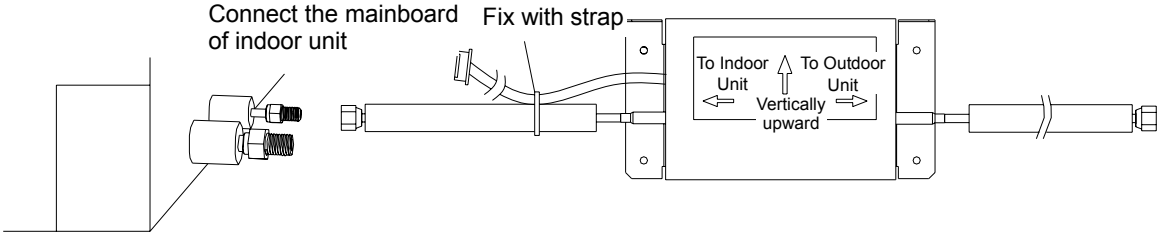

(4) Final treatment: The section where the pipe is connected must be wrapped for thermal insulation.

⚠ **WARNING!**
Please ensure the pipe is fully covered by sponge and not exposed in air. Condensing water will be generated on the pipe if the thermal insulation is poor.

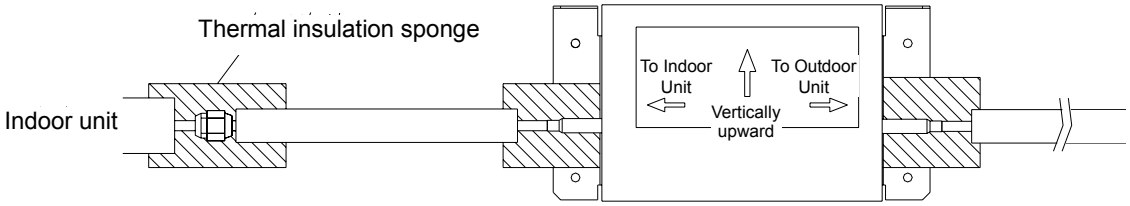

8 INSTALLATION OF CONDENSATE PIPE

8.1 Material quality requirements

Generally, the condensate pipe shall be water supply U-PVC pipe, adhered by using special glue. The other materials available include: PP-R pipe, PP-C pipe and hot-dipped galvanized steel pipe. It is not allowed to use aluminum plastic composite pipe.

8.2 Key points for installation

1）.Work Order

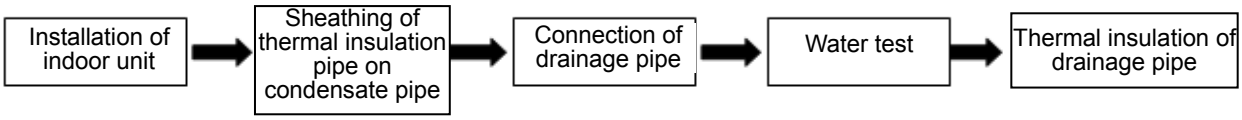

2). Determine the direction and elevation of condensate pipe before installation. To ensure the gradient smooth and straight, avoid intersecting with other pipelines. The height of the clamp fixing the pipe hanger frame shall be adjustable and fixed from the outer of thermal insulation.

3).Distance between hanger frames:

Outer diameter of water pipe (mm)	ф≤25	32＞ф≥25	ф≥32
Spacing between horizontal pipes (mm)	800	1000	1500
Spacing between standpipes (mm)	1500		2000

Each standpipe shall have two hanger frames at least.

4). The gradient of condensate pipe shall be over 1% and the gradient of main pipe shall not be less than 0.3%, while there shall be no overhanging slope.

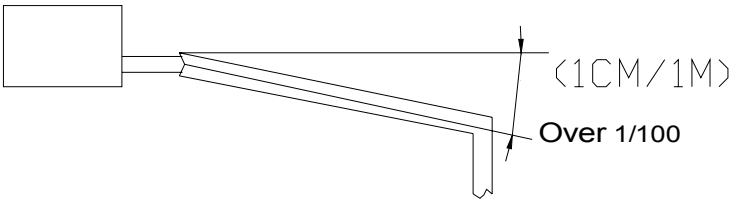

5). When connecting the 3-way section of condensate pipe, the 2-way straight section on 3-way pipe shall be on the same gradient. The two ends of 2-way section shall not have different gradient. See the schematics below:

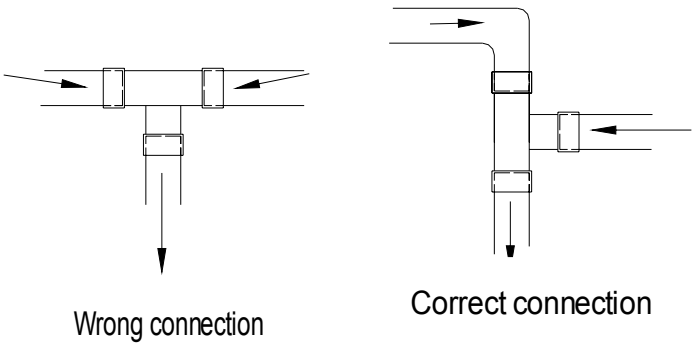

6). Confluence toward the horizontal pipe shall be best from the upper. Back flow is easy to occur if from the lengthwise direction.

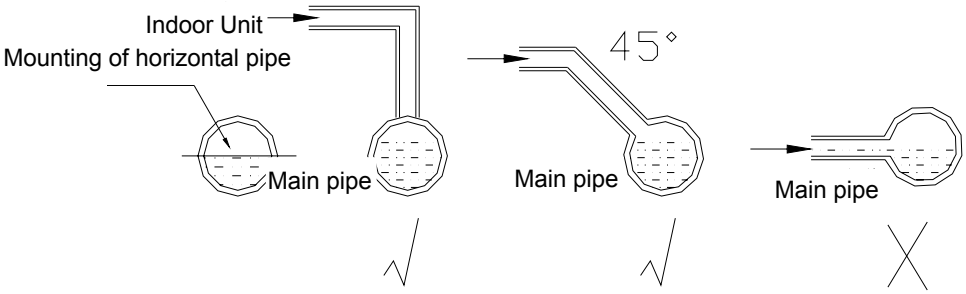

7) Do not tie the condensate pipe and refrigerant pipe together.
8) To ensure smooth drainage of condensate, a vent hole shall be set at the highest point of drainage hose .
9) Carry out water flow test and full water test after the pipe connection is completed. On one hand, check if the drainage is smooth; on another hand, check the piping system for any leakage.
10) Steel sheath shall be provided to the pipe crossing the wall or slab. The pipe joint shall not be positioned within the sheath. The steel sheath shall be flush with the wall surface or slab base, but 20mm higher than the slab base. The sheath shall not affect the pipe gradient. The clearance between pipe and sheath shall be blocked by using flexible inflammable materials. The sheath shall not be used as the supporting point of the pipe.
11) The joint of thermal insulation materials must be adhered by using special glue and then wrapped with plastic tape having a width not less than 5cm to avoid condensing.
12). Ensure a gradient over 1% when connecting the drainage hose to the indoor unit.

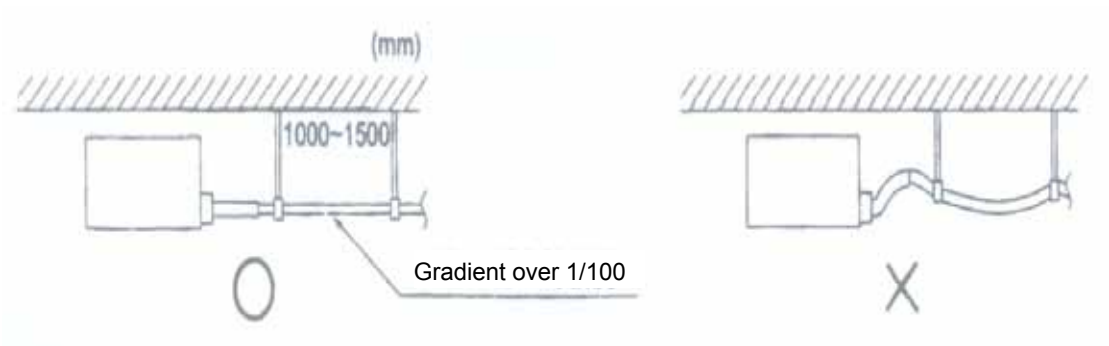

13) When connecting the drainage hose to the indoor unit, please fix with the included pipe clamp and do not use glue water, thus to ensure easy repair.
14) Installation requirements for auxiliary drainage hose

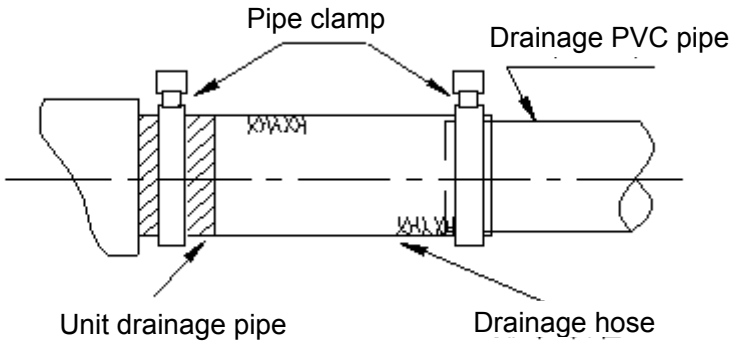

The auxiliary drainage hose must be thermally insulated

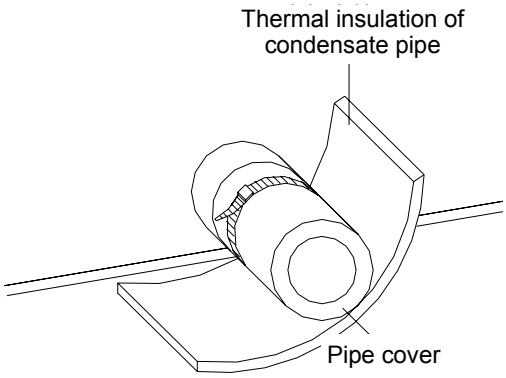

15) The long drainage hose may be fixed by using hanger bolts, thus to ensure a gradient of 1/100 (PVC cannot be bent).

The spacing between the supports of horizontal pipe is 0.8-1.0m. Twisting will be caused and thus air bag will be formed if the spacing is too high. Once the air bag is formed, the pump can only compress the air bag no matter how forcible it pushes, but there is no flowing water, thus resulting in abnormal water level. This will cause flooding of the ceiling.

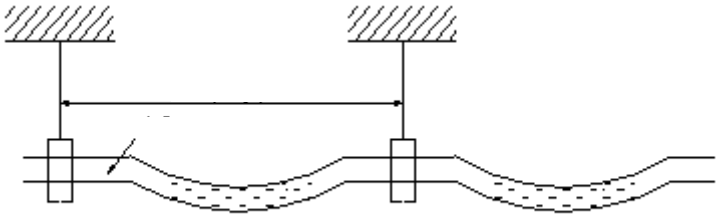

16). If the air flow of indoor unit is high, this might cause negative pressure and result in return suction of outdoor air. Therefore, U-type water trap shall be designed on the drainage side of each indoor unit.

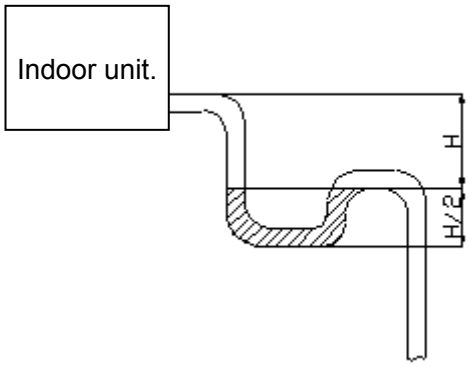

- Install water trap as shown below
- Install one water trap for each unit
- Installation of water trap shall consider easy cleaning in the future.

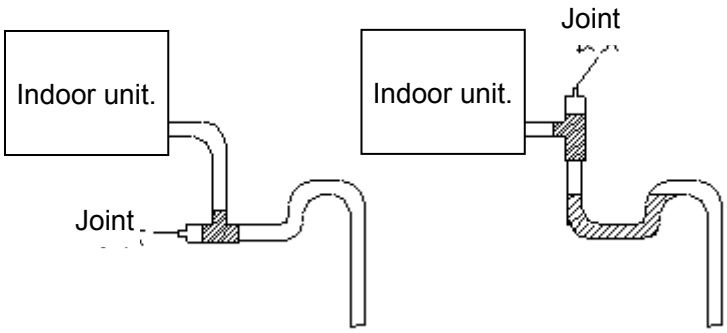

17) Connection of drainage branch pipe to the standpipe or horizontal pipe of drainage main pipe
The horizontal pipe cannot be connected to the vertical pipe at a same height. It can be connected in a manner as shown below:

N01:3-way connection of drainage hose joint

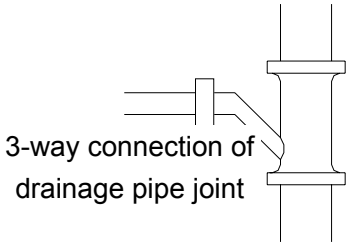

NO2: Connection of drain elbow

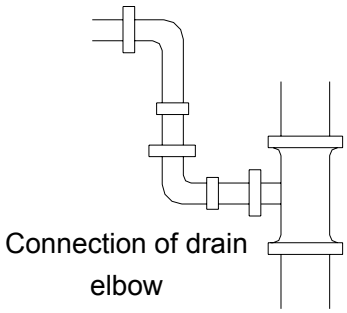

NO3: Connection of horizontal pipe

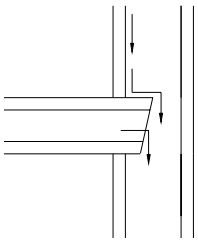

Connection of
horizontal pipe

Drainage hose is requisite for air conditioner unit. During cooling, the moisture in the air will condense on the surface of evaporator. Such condensing water must be drained out of the unit. Meanwhile, the drainage hose has an important role to determine if the air conditioner can plays its full functions.

18). All the condensate pipes must be installed at a distance over 500mm from the electric box of the unit.

8.3 Installation of drainage hose for different types of indoor unit

1) Duct-type Indoor Unit (Including General Static Pressure and Low Static Pressure)

a. Installation of drainage hose

- The diameter of drainage hose shall be equal to or higher than the diameter of connection pipe. (PVC pipe: Dimension: Outer diameter 25mm, 32mm)
- The drainage hose shall be short and has a down gradient of 1/100 at least, thus to avoid air bag.
- To ensure that the drainage hose will not be bent and has enough gradient, a distance of 1 ~ 1.5m shall be kept between the hanger frames.

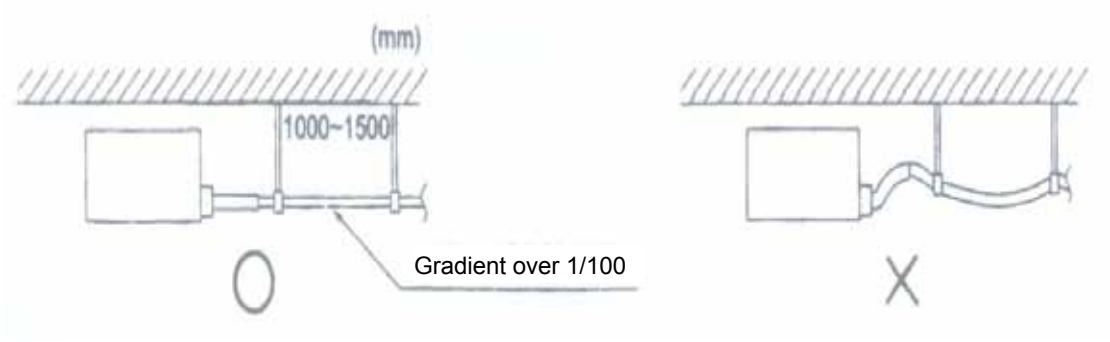

- Use drainage hose and clamp.
  Insert the drainage hose to the root. From the middle of white tape, tighten the clamp until the tightening distance to the screw head is shorter than 4mm.
  A. For thermal isolation, use sealing tape to wrap the drainage hose and clamp.
  B. The indoor drainage hose shall be thermally insulated.

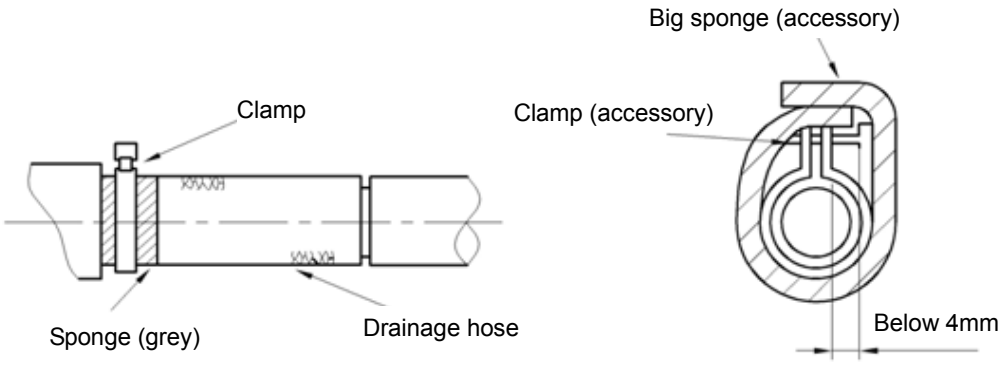

C. To prevent foreign articles from entering the pipe, please minimize the bend of pipeline, thus to ensure cleanliness of the drainage elbow.

D. The drainage hose must be wrapped with thermal insulation tube, thus to avoid condensing on the outer surface of drainage hose . See below for the thickness of thermal insulation tube.

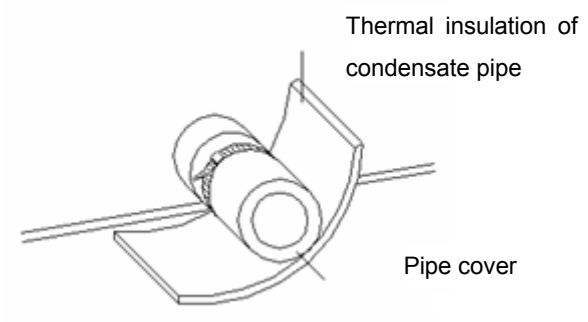

Drainage hose (mm)(Outer Dia)	Thickness of Thermal Insulation Materials (mm)
Φ17	≥15
Φ27	≥20
≥34.9	≥20

※ Notes:

E. The inclination of drainage hose① shall be within 75mm, so that the drainage insert will not bear excessive force.

F. To connect the drainage hose s for multiple machines, please use the method of multi-pipe collection, as shown below.

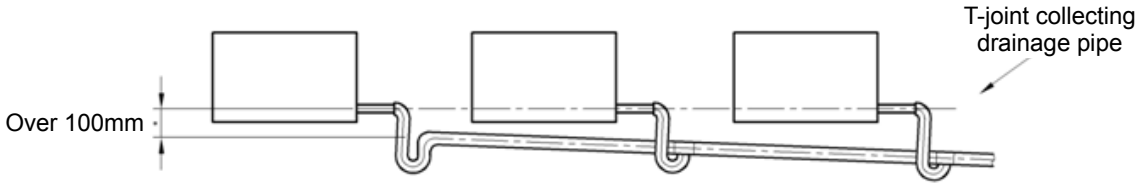

Fig. The specification of collecting drainage hose shall be suitable to the working capacity of the unit

We may collect the drainage hose s of all the indoor units in one system (An outdoor unit and all the indoor units connected to this outdoor unit are called one system), or collect the drainage hose s of all the indoor units in several systems.

Notes: The ceiling height must be considered, and a specific gradient shall be ensured along the water flow direction.

2) Cassette Type (Including 4-way and 1-way)

a. Installation of drainage hose

- The drainage hose shall be installed to ensure smooth flow of water.
- The diameter of drainage hose shall be equal to or higher than the diameter of connection pipe (PVC pipe) (exclusive of the rise section).
- The drainage hose shall be short and has a down gradient of 1/100 at least, thus to avoid air bag
- If the inclination of the drainage hose is insufficient, drainage rise pipe shall be mounted.
- The installing height of drainage rise pipe shall be less than 280mm.
- The drainage rise pipe shall be in right angle to the unit and the distance to the unit shall not exceed 300mm.

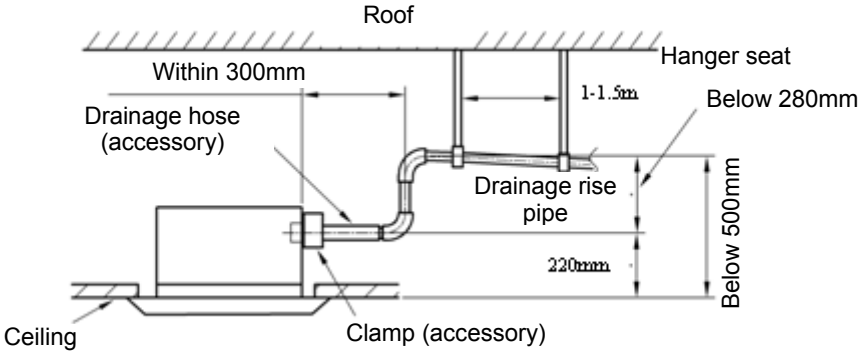

- The inclination of included drainage hose shall be within 75mm, so that the drainage insert will not bear excessive force.

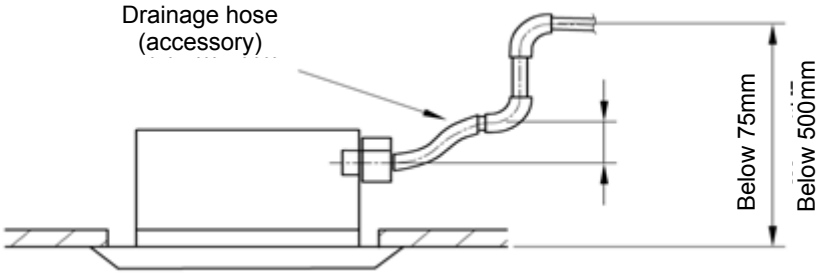

- To prevent the drainage hose from dropping downward, hanger rods shall be erected every 1.0~1.5m.

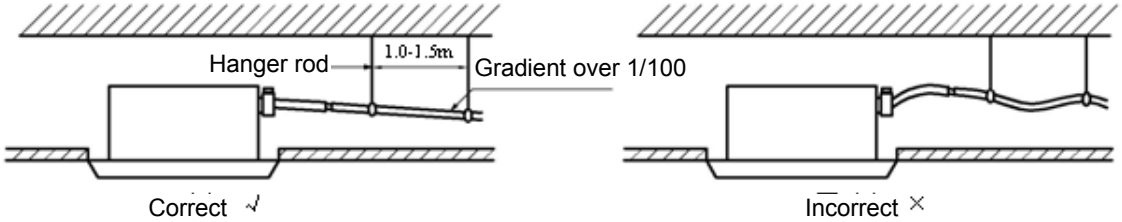

- Use the included drainage hose and clamp. Insert the drainage hose to the drainage port and tighten the clamp.
- For thermal insulation, wrap the big sponge to the drainage hose clamp.
- The indoor drainage hose shall be thermally insulated.

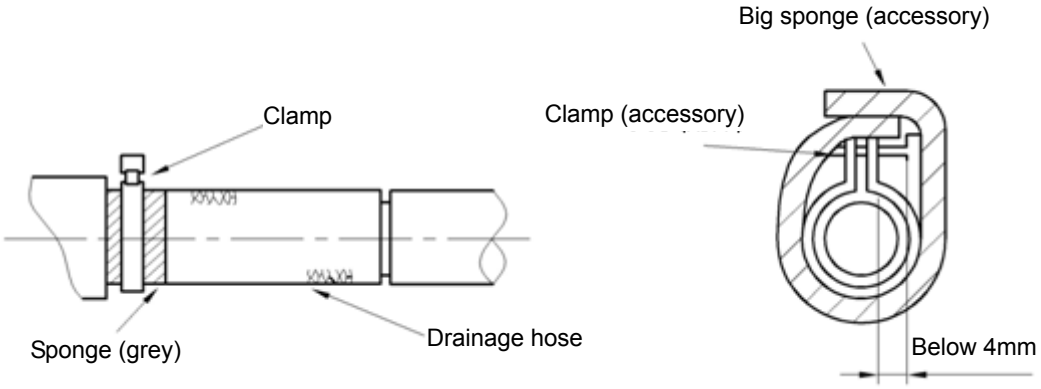

- To connect the drainage hoses for multiple machines, please use the method of multi-pipe collection, as shown below.

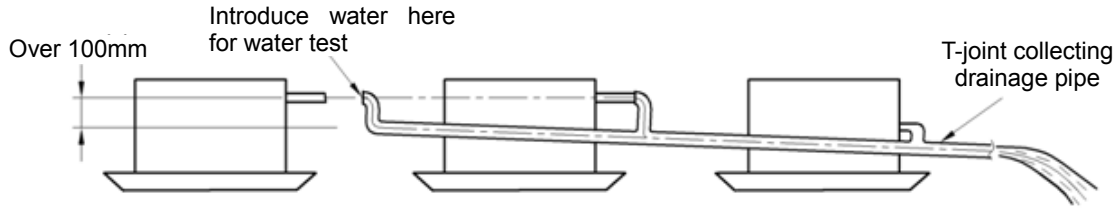

Fig. The specification of collecting drainage hose shall be suitable to the working capacity of the unit

We may collect the drainage hoses of all the indoor units in one system (An outdoor unit and all the indoor units connected to this outdoor unit are called one system), or collect the drainage hoses of all the indoor units in several systems.

The ceiling height must be considered, and a specific gradient shall be ensured along the water flow direction. The cassette-type indoor unit is provided with water pump, and the maximum lift of its drainage hose is 280mm.

- During installation, please take care that:

The diameter of drainage hose connected to the indoor unit must meet the specifications. The pipe diameter shall not be too small; otherwise the water may overflow.

The main drainage hose depends on the number of indoor units. Generally, it is required to be equal to or higher than ϕ35mm.

The drainage hose shall be thermally insulated. The thickness of thermal insulation pipe must meet the requirements. The clearance between thermal insulation pipes shall be sealed with adhesive sticker.

Please discharge the water to the ground drain, water closet or any other place easy to drain the water out.

b) After installation, check if the drainage is smooth.

3) Wall-mounted Type

Assemble the drainage hose as shown below and take measures to prevent condensing. Improper assembly of the drainage hose may cause leakage, or even expose the furniture to moisture.

a) Assembly of drainage hose

- To avoid air in water elbow, the drainage hose shall be kept as short as possible and inclined downward, as shown below.
- During connection, please use PVC pipe of equal size higher than this size (Nominal Dia,: 20mm; Outer Dia.: 26mm)
- The drainage hose must be arranged in down inclination along water flow direction, thus to avoid air bubble blocking. Take care not to arrange the pipe in twisting, protrusion or waveform. Do not put the outlet of drainage hose into water.

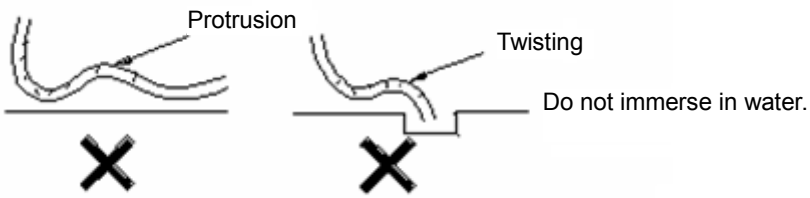

- The extended section of drainage hose shall be wrapped with thermal insulation sheath when passing the room.

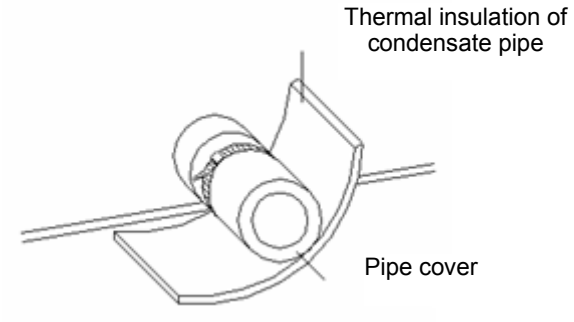

Fig.3.41

- After installation of the drainage hose, be sure to make water test and check if the water can be drained smoothly.

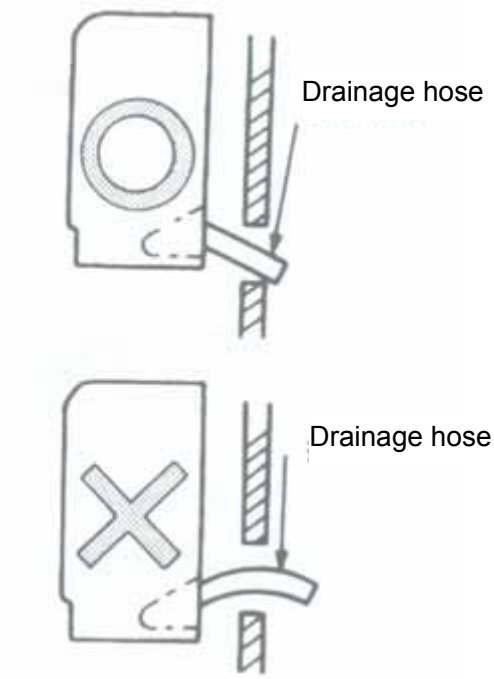

b. After piping work, check if the draining flow is smooth.

8.4 Test for Condensate Pipe

The water test for condensate pipe includes closed water test and drainage test. The closed water test is focused on checking if the drainage hose system is well sealed and if there is any leakage. The drainage test is focused on checking if the drainage hose system can drain water smoothly and thoroughly and ensuring that there is no water deposit (except the specially designed water trap).

After connection of the drainage hose is completed, firstly carry out closed water test. Seal the outlet of drainage hose with adhesive tape or plug. Then, fill water into the drainage hose system form indoor unit side. Stop filling after ensuring that all the drainage hoses are filled with water. After 24 hours, check all the joints of water pipe for any leakage. If any, repair and reinstall. If no leakage, proceed to drainage test.

Remove the adhesive tape or plug from the drainage hose. Check the water tray and drainage hose of indoor unit if the drainage is thorough and if there is any water deposit. If any, readjust it. If not, complete the water test and proceed to the thermal insulation on all pipe joints.

8.5 Requirements of Heat Insulation

- Heat Insulation Materials

  The thermal insulation material of obturator foam shall be used. Fireproof level: B1.

  The thermal conductivity shall not be higher than 0.035w/ (m·k) when the average temperature is 0°C.
- Thickness of thermal insulation layer

  The thickness of thermal insulation layer on condensate pipe shall be over 10mm.
- The joint of thermal insulation materials must be adhered by using special glue and then wrapped with plastic tape having a width not less than 5cm to avoid condensing.
- Thermal insulation is not required for the outdoor section of condensate pipe.

9 ELECTRICAL INSTALLATION

9.1 Precautions for Electrical Installation

☆ Carry out installation according to national cabling rules.
☆ Rated supply voltage and special circuit for air conditioner must be used.
☆ Do not pull the power cables with force.
☆ All the electric installations must be carried out by specialist technicians in accordance with the local laws, rules and these instructions.
☆ The diameter of power cords must be large enough. The damaged power cords and connection wires must be replaced with special cords.
The earthing shall be secure. The earthing wire shall be connected to the special earthing device on the construction. The installation must be done by specialist technicians. The air switch shall have both the magnetic tripping and thermal tripping functions to ensure protection against the short circuit and overload.

●Earthing Requirements

☆ The air conditioner belongs to Category I Electric Appliance. Therefore, be sure to take reliable earthing measures.
☆The yellow-green wire inside the air conditioner is used for earthing. Do not use it for other purposes or cut it. Do not fix with tapping screw. Otherwise, it will cause the risk of electric shock.
☆The earthing resistance shall comply with the national standard GB17790
☆Reliable earthing terminal must be provided on the user's power supply. Never connect the earthing wire to the following places:
①Water pipe; ②Gas pipe; ③Sewage pipe;
④Other places that the specialist technicians think unreliable.

9.2 Specifications of power cord & circuit breaker

Model	Power supply (V,Ph,Hz)	Capability of circuit breaker (A)	Min. sectional area of earth lead (mm^2)	Min. sectional area of power cord (mm^2)
GMV(L)-Pd100W/NaB-K	220~240V 50 Hz	32	6.0	6.0
GMV(L)-Pd120W/NaB-K	220~240V 50 Hz	32	6.0	6.0
GMV(L)-Pd140W/NaB-K	220~240V 50 Hz	40	10.0	10.0
GMV(L)-Pd160W/NaB-K	220~240V 50 Hz	40	10.0	10.0

Note：The specification of power cord mentioned hereby is defined as the required specification when wiring with BV single core cable (2 ~ 4 pieces) under the cover of PVC pipe, and ambient temperature shall be at 40°C; Air switch shall be selected according to 40°C temperature condition, and shall in "D" type. if the installation condition on site changed, please consider the modification on the required specification of Power cord and Air switch, according to the specification manual provided by manufacture.

9.3 Wiring Sketch Map

9.3.1 **Connection of power cord and communication line**

The indoor unit and outdoor unit shall be powered separately.

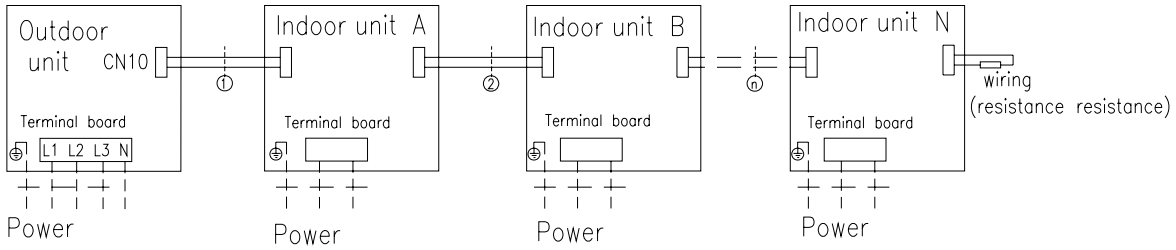

Connection Schematics for Indoor / Outdoor Power Cords and Communication Line (3-phase)

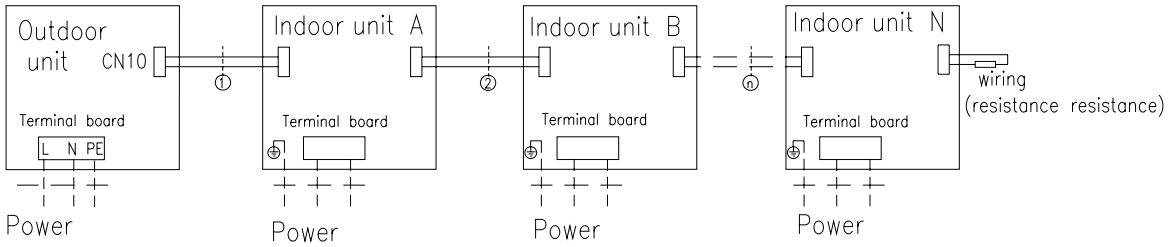

Connection Schematics for Indoor / Outdoor Power Cords and Communication Line

9.4 Dial-up

Gree DC Multi VRF unit is provided with three dial-up, i.e. function dial-up, address dial-up and capacity dial-up. ou may adjust the function dial-up to set the control, mode and functions of the unit; adjust the address dial-up to set the matching relation between indoor unit and wired controller; and adjust the capacity dial-up to set the capacity demands of the indoor unit.

9.4.1 Function Dial-up

⚠ **CAUTIONS!** The S7 function dial-up is located on the mainboard of indoor unit. It can be operated only when the client needs to change the default function settings; otherwise the default position shall be maintained.

Functional dial switch S7			
DIP swicth	Functional Description:	Dial-up Setting	
		0 (ON Position)	1
1(S/R)	Setting of memory mode	Standby (S)	Restore (R)
2(L/I)	Setting of control mode	Wired control (L)	Remote control (I)
3(M/S)	Setting of master / slave indoor unit	Master indoor unit (M)	Slave indoor unit (S)
4(I/O)	Setting of ambient temperature acquisition point	Return air inlet (I)	Receiver (O)
5(L/H)	Setting of high / low static pressure fan	Low static pressure (L)	High static(H)

Functional description of function dial-up:

DIP swicth 1 (S/R): Setting of memory mode, including the standby mode and restoration mode. The standby mode refers to that the previous parameters will be kept but the unit will not run automatically after the power supply is resumed. This setting is factory defaulted (DIP swicth pulled to “ON” position). For example, if the parameters of an indoor unit set before power shutdown are High Fan and 24°C, the unit will be under standby state after the power supply is resumed and after the unit is manually started, the parameters will remain as High Fan and 24°C. The restoration mode refers to that not only the previous parameters will be kept, but also that the unit can start automatically after the power supply is resumed. But if the unit is under STOP state before power shutdown, it will be also under STOP state after the power supply is resumed.

DIP swicth 2 (L/I): Setting of control mode, including wired control and remote control. The wired control mode refers to that the indoor unit is controlled from wired controller (wired controller). This setting is factory defaulted (DIP swicth pulled to “ON” position). When the setting is wired control mode, the function dial-up on S7 for “setting of memory mode” and “setting of master / slave indoor unit” will be disabled. These two settings can be done from the wired controller directly. The remote control mode refers to that the indoor unit is controlled from remote controller. When the setting is remote control mode, its function dial-up must be set on S7.

DIP swicth 3 (M/S): The setting of master / slave indoor unit refers to the master / slave setting of indoor run mode, mainly used to meet the needs of special people on priority (e.g. leader, patients, etc). The factory default setting is that all indoor units are master (DIP swicth pulled to “ON” position).

When all the indoor units are set as slave, the outdoor unit will run according to

the mode of slave indoor unit that is firstly started. If the mode of slave indoor unit started later has in conflict against the mode started earlier, the system will display mode conflict error, so that the indoor unit started later cannot work. In this case, the run mode of the unit is decided by the slave indoor unit that is firstly started.

When only one indoor unit is set as master, no matter if the master indoor unit is firstly started or not, the slave indoor unit will give out mode conflict error as long as its mode is in conflict against the mode of master indoor unit (except that the master indoor unit is stopped). In this case, the unit run according to the mode of master indoor unit on priority.

When several indoor units are set as master, the mode of master indoor unit with a lower address code will be taken as the master run mode of the unit. when the master indoor unit with the lowest address code is changed from STOP state to RUN state, the mode of other master indoor units or slave indoor units shall be kept identical to its mode; otherwise the system will give out mode conflict error. Therefore, when there are several master indoor units, the address code of the unit shall be set from lower to higher according to priority level.

DIP swicth 4 (I/O): Setting of ambient temperature acquisition point. This setting is mainly used when the temperature of air conditioner area differs largely from the return air inlet temperature of the unit. Meanwhile, this setting is only valid when the receiver is connected, including the setting of temperature acquisition point at return air inlet and setting of the temperature acquisition point at receiver head. The factory default setting is acquisition of return air inlet temperature (DIP swicth pulled to “ON” position).

DIP swicth 5 (L/H): Setting of high / low static pressure fan. This setting includes the setting of high static pressure fan and low static pressure fan, adjusted as needed for the project. The factory default setting is low static pressure fan (DIP swicth pulled to “ON” position).

Cautions:

1)The above settings must be done under power shutdown state.

2)The DIP swicth of function code is classified into 3-bit code, 4-bit code and 5-bit code. The 4-bit code or 5-bit code is used for duct-type unit only (including multi duct-type unit and 1-to-1 duct-type unit).

3)When the “setting of control mode” is “L”, the function dial-up for “setting of memory mode" and “setting of master / slave indoor unit” will be disabled. When the “setting of control mode” is “I”, this function dial-up setting is enabled.

4)The DIP swicth shall be put to position correctly, and shall not be put to middle position. Dialing of the switch to “ON” position indicates “0” and the dialing to opposite direction indicates “1”.

5)After dialing up, please mark the address code of the unit(√)

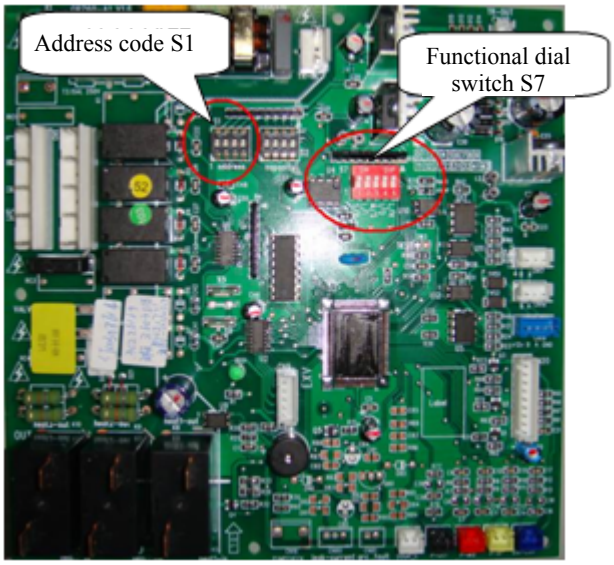

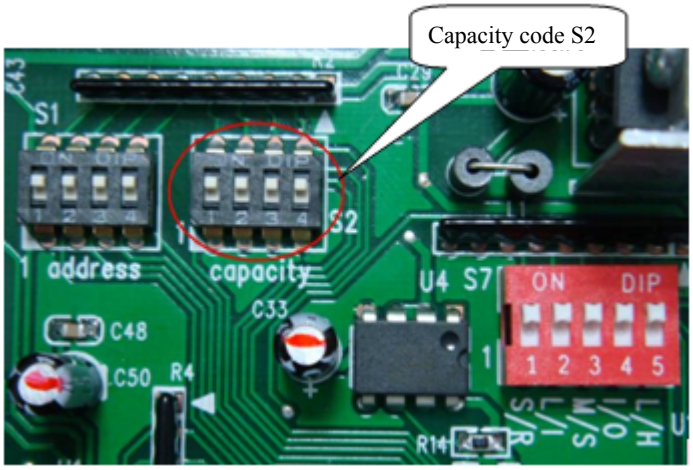

Mainboard of 5-bit Function Dial-up

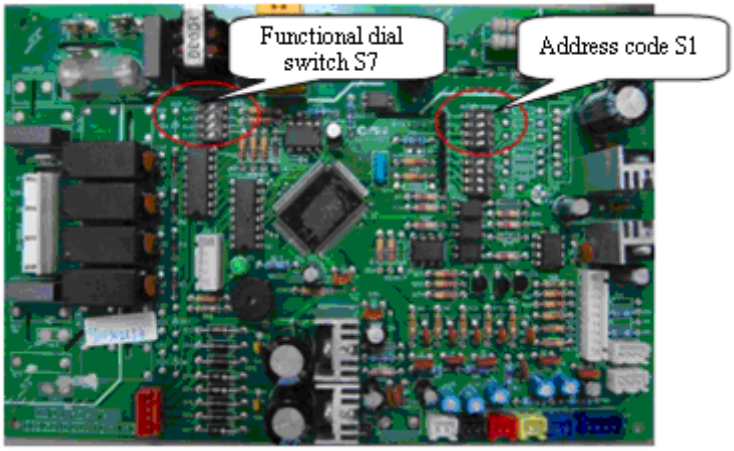

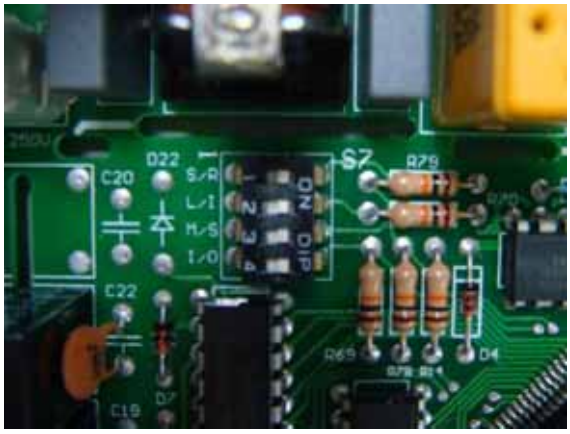

Mainboard of 4-bit Function Dial-up

9.4.2 Address dial code

Address dial-up must be set for the multi indoor units; otherwise abnormal communication will be caused to the unit. The address code has 4-bit dial-up in total. The highest address is 16 and the lowest address is 1.

⚠ NOTES! To use multiple indoor units in parallel, make sure to change the setting of address code before installation and guarantee that the address code of each indoor unit must be different (The address code is located on the mainboard of indoor unit). If wired controller is used, make sure to dial the address code of wired controller to the position same as the address code on corresponding indoor unit. (The address code of wired controller is located on the back of wired

controller)

☆Below is factory default setting:

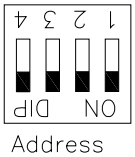

The default setting of address dial-up code is 0000 and the address is 1 (See above for the position of dial lever).

☆Dial-up Value

The dial-up value of address code is set in binary system. The dial-up value is “0” when the lever is dialed to “ON” end; the dial-up is “1” when the lever is dialed to numerical end on opposite side. For number 4~1 on the address code, the dial-up #4 refers to high bit and the dial-up 1# refers to low bit.

Dial-up Table (4-bit DIP swicth)				
4-bit	3-bit	2-bit	1-bit	Address
0	0	0	0	1
0	0	0	1	2
0	0	1	0	3
0	0	1	1	4
0	1	0	0	5
0	1	0	1	6
0	1	1	0	7
0	1	1	1	8
1	0	0	0	9
1	0	0	1	10
1	0	1	0	11
1	0	1	1	12
1	1	0	0	13
1	1	0	1	14
1	1	1	0	15
1	1	1	1	16

Example 1: If the dial value is “0111”, this represents that the address is “8”, the pins 1, 2 & 3 of the dial switch are dialed to the numerical end, and the pin 4 is dialed to “ON”.

Example 2: If the dial value is “1010”, this represents that the address is “11”, the pins 2 & 4 of the dial switch are dialed to the numerical end, and the pin 1 & 3 are dialed to “ON”.

See below.：

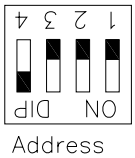

Address 8, dial-up value 0111

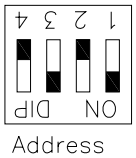

Address 11, dial-up value 10109.

4.3 Capacity dial-up

On the mainboard of indoor unit, two 4-bit DIP switches are used to distribute the address and capacity of indoor units. The 4-bit DIP switch (marked with “capacity” below) used for setting the capacity of indoor units is factory set before shipment of indoor unit, while it is covered by sealant, so that it cannot be changed by the user.

☆Below is factory default setting:

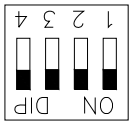

Capacity

The default Capacity dial-up is the maximum capacity of indoor unit. As shown above, the capacity is (See above for the lever position)

☆Dial-up Value

The dial-up value of capacity code is set in binary system. The dial-up value is “0” when the lever is dialed to “ON” end; the dial-up is “1” when the lever is dialed to numerical end on opposite side. For number 4~1 on the capacity code, the dial-up #4 refers to high bit and the dial-up 1# refers to low bit.

Dial-up Table (4-bit DIP swicth)				
4-bit	3-bit	2-bit	1-bit	Capacity
0	0	0	0	20
0	0	0	1	25
0	0	1	0	30
0	0	1	1	35
0	1	0	0	40
0	1	0	1	45
0	1	1	0	50
0	1	1	1	60
1	0	0	0	224
1	0	0	1	70
1	0	1	0	80
1	0	1	1	90
1	1	0	0	100
1	1	0	1	112
1	1	1	0	140
1	1	1	1	280

MAINTENANCE

MAINTENANCE

1 List of Unit Errors

1.1 List of Error Display on Wired Controller

Error Code	Error Description	Source of Error Signal	Notes on Control
E1	Compressor high-pressure protection	High-pressure Switch	The high pressure protection value is 4.2MPa. When it is detected three times successively that a compressor is under high pressure, this compressor will be stopped. In this case, error code E1 will be displayed and the run indicator will blink.
E2	Indoor antifreeze protection	Evaporator sensor	When it is detected for 10 minutes successively that $T_{evap.}$ is ≤-2°C (varying with indoor unit), the antifreeze protection will be activated, in which case the outdoor unit will immediately shut off the indoor electronic expansion valve and the capacity will be set to “0”.
E3	Compressor low-pressure protection	Low-pressure Switch	When the low pressure reaches the protection value (absolute pressure: 0.15MPa), the low pressure switch will be cut off, in which case the low pressure protection will be displayed.
E4	Compressor exhaust temperature protection	Exhaust temperature sensor	When the exhaust temperature ($T_{exhau.}$) is equal to and higher than 113°C, the compressor will be stopped. Upon the first occurrence of exhaust protection, the error code E4 will be displayed. When the exhaust temperature is lower than TR°C, the compressor will resume to operation after it has been stopped for 3 minutes. The compressor can resume to operation for the first two times. But if this occurs three times successively in 1 hour, the unit must be disconnected from power supply before it can restarted.
E5	Frequency converter overcurrent protection	Compressor drive	The drive board of variable frequency compressor is incurred to error. For details on the error message, please refer to the Display Code on Digital Tube of Outdoor Unit.
E6	Communication error	Communication	The mainboard of indoor unit or the wired control is incurred to communication error with outdoor unit. The indoor unit incurred to communication error will be stopped and display the error code.
E7	Mode conflict	User operation	The run mode of the unit that is started later is inconsistent to the mode that is started earlier. Only the cooling and dry mode has possible mode conflict against the heat mode. For fan mode, there is no mode conflict against the cooling, dry or heat mode. In case mode conflict occurs, the indoor unit with mode conflict will display E7 and be stopped.
E9	Water-full protection	Water pump	When water full is detected for 8 seconds successively, the system will enter into water-full protection state, in which case the wired controller will display E9 and give out alarm. In case of water-full protection under each mode, the other loads of the indoor unit will be stopped, except that the water pump will remain working and give out alarm. In this case, the outdoor unit shall adjust the capacity output accordingly
F0	Indoor ambient temperature sensor error	Indoor room sensor	The indoor unit incurred to sensor error will display error code and be stopped.
F1	Indoor coil inlet temperature sensor error	Indoor coil-inlet temperature sensor	The indoor unit incurred to sensor error will display error code and be stopped.
F2	Indoor coil middle temperature sensor error	Indoor coil-middle temperature sensor	The indoor unit incurred to sensor error will display error code and be stopped.
F3	Outdoor coil inlet temperature sensor error	Indoor coil-exit temperature sensor	The indoor unit incurred to sensor error will display error code and be stopped.

F4	Outdoor ambient temperature sensor error	Outdoor environment sensor	Test for 30 seconds successively to check if the temperature sensor is disconnected. If yes, alarm will be sent; otherwise no processing will be made. If the controller of outdoor unit detects failure of outdoor sensor under open circuit, short circuit and excess of test value, the outdoor unit will execute the following default actions, that is, the error message will be sent to each indoor unit and the error code will be displayed via error indicator or wired controller. When the outdoor ambient temperature is lower than -5°C, the disconnection failure of outdoor inlet, middle and exit sensors in shield room will be processed as under -30°C.
F7	Outdoor defrost temperature sensor error	Outdoor Defrost Sensor	Test for 30 seconds successively to check if the temperature sensor is disconnected. If yes, alarm will be sent; otherwise no processing will be made. If the controller of outdoor unit detects failure of outdoor sensor under open circuit, short circuit and excess of test value, the outdoor unit will execute the following default actions, that is, the error message will be sent to each indoor unit and the error code will be displayed via error indicator or wired controller. When the outdoor ambient temperature is lower than -5°C, the disconnection failure of outdoor inlet, middle and exit sensors in shield room will be processed as under -30°C.
F9	Exhaust temperature sensor error	Exhaust temperature sensor	Test for 30 seconds successively to check if the temperature sensor is disconnected. If yes, alarm will be sent; otherwise no processing will be made. If the controller of outdoor unit detects failure of outdoor sensor under open circuit, short circuit and excess of test value, the outdoor unit will execute the following default actions, that is, the error message will be sent to each indoor unit and the error code will be displayed via error indicator or wired controller. When the outdoor ambient temperature is lower than -5°C, the disconnection failure of outdoor inlet, middle and exit sensors in shield room will be processed as under -30°C.

Error Code of Duct-type Unit

Error	Error Code	Error	Error Code
Prevention against low temperature	E2	Error with oil temperature sensor 2 (digital)	Fb
Outdoor ambient temperature sensor error	F4	Indoor ambient temperature sensor error	F0
Indoor tube-inlet sensor error	F5	Exhaust overtemperature	E4
Outdoor tube-middle sensor error	F6	Low-pressure protection	E3
Outdoor tube-exit sensor error	F7	Overcurrent Protection	E5
Error with exhaust temperature sensor 1 (fixed-frequency)	F8	High-pressure protection	E1
Indoor tube-inlet sensor error	F1	Communication error	E6
Indoor tube-middle sensor error	F2	High-pressure valve error	Fc
Indoor tube-exit sensor error	F3	Low-pressure valve error	Fd
Error with exhaust temperature sensor 2 (fixed-frequency)	F9	Water-full protection (Cassette)	Eb
Error with oil temperature sensor 1 (fixed-frequency)	FA		

King Series

Error	Tube-inlet sensor error	Tube-middle sensor error	Tube-exit sensor error	Room sensor error	Defrost	Antifreeze	Mode conflict	Communication error	Outdoor unit failure
Power Lamp	Bright	Bright	Bright	Bright	Bright	Dark	Dark	Blink	Blink
Test lamp	Dark	Blink	Blink	Bright	Blink	Dark	Blink	Blink	Dark
Timer lamp	Blink	Blink	Bright	Blink	Dark	Blink	Bright	Blink	Dark

Feng Yun and Feng Xia series

Error	Tube-inlet sensor error	Tube-middle sensor error	Tube-exit sensor error	Room sensor error	Defrost	Antifreeze	Mode conflict	Communication error	Outdoor unit failure
Test lamp	Blink（1）				Bright	Dark	Blink	Blink (2)	Blink
Timer lamp	Blink				Blink	Blink	Bright	Blink	Dark

Notes::(1)Bright and dark intermittently (2)Bright and dark simultaneously

Floor Standing: Lantianshi, qingliangwangzi, fengsheng series

Error	Error Code	Error	Error Code
Indoor tube-inlet sensor error	F1	Indoor tube-middle sensor error	F2
Indoor tube-exit sensor error	F3	Outdoor ambient temperature sensor error	F4
Outdoor tube-inlet sensor error	F5	Outdoor ambient temperature sensor error	F6
Outdoor tube-exit sensor error	F7	Error with exhaust temperature sensor 1 (fixed-frequency)	F8
Error with exhaust temperature sensor 2 (digital)	F9	Error with exhaust temperature sensor 2 (digital)	FA
Error with oil temperature sensor 2 (digital)	Fb	Indoor ambient temperature sensor error	F0
Prevention against low temperature	E2	High-pressure protection	E1
Low-pressure protection	E3	Exhaust overtemperature	E4
Overcurrent Protection	E5	Communication error	E6
Mode conflict	E7	High-pressure valve error	Fc
Low-pressure valve error	Fd		

1.2 Display Code on Digital Tube of Outdoor Mainboard

Error	Display on Digital Tube	Display on Indoor Unit	Error	Display on Digital Tube	Display on Indoor Unit
DC overvoltage protection	PH	E5	Input overcurrent protection	PA	E5
Module overheat protection	P8	E5	Jumper fault	C5	No display
Current test circuit fault	Pc	E5	Recharging circuit fault	PU	E5
Module temperature sensor fault	P7	E5	High-pressure protection	E1	E1
Compressor overcurrent protection	P5	E5	Low-pressure protection	E3	E3
DC undervoltage protection	PL	E5	Exhaust protection	E4	E4
Compressor startup failure	Lc	E5	Compressor overload protection	H3	E5
PFC module protection	Hc	E5	Communication fault (between indoor / outdoor unit and wired controller)	E6	E6
Drive resetting and stop	P0	E5	Outdoor ambient temperature sensor error	F4	F4
Protection of compressor against loss of synchronization	H7	E5	Indoor coil inlet temperature sensor error	F5	F5
Compressor protection against loss of phase	Ld	E5	Indoor coil middle temperature sensor error	F6	F6
Inverter drive communication fault	P6	E5	Outdoor coil outlet temperature sensor error	F7	F7
IPM module protection	H5	E5	Exhaust temperature sensor error	F9	F9

1.3 Display of the number of indoor units

Note: You may press down SW3 key of outdoor unit twice continuously within 2s, so that the system will detect the number of indoor units, in which case the LED1～LED4 will blink in turn, LED5 and LED6 will become dark. After 12 seconds, the number of indoor units will be displayed.

Number of indoor units	Lamp display					
	LED6	LED5	LED4	LED3	LED2	LED1
1	Dark	Dark	Dark	Dark	Dark	Bright
2	Dark	Dark	Dark	Dark	Bright	Dark
3	Dark	Dark	Dark	Dark	Bright	Bright
4	Dark	Dark	Dark	Bright	Dark	Dark
5	Dark	Dark	Dark	Bright	Dark	Bright
6	Dark	Dark	Dark	Bright	Bright	Dark
:	:	:	:	:	:	:
:	:	:	:	:	:	:
62	Bright	Bright	Bright	Bright	Bright	Dark
63	Bright	Bright	Bright	Bright	Bright	Bright

2 Flow chart of troubleshooting

2.1 High-pressure protection

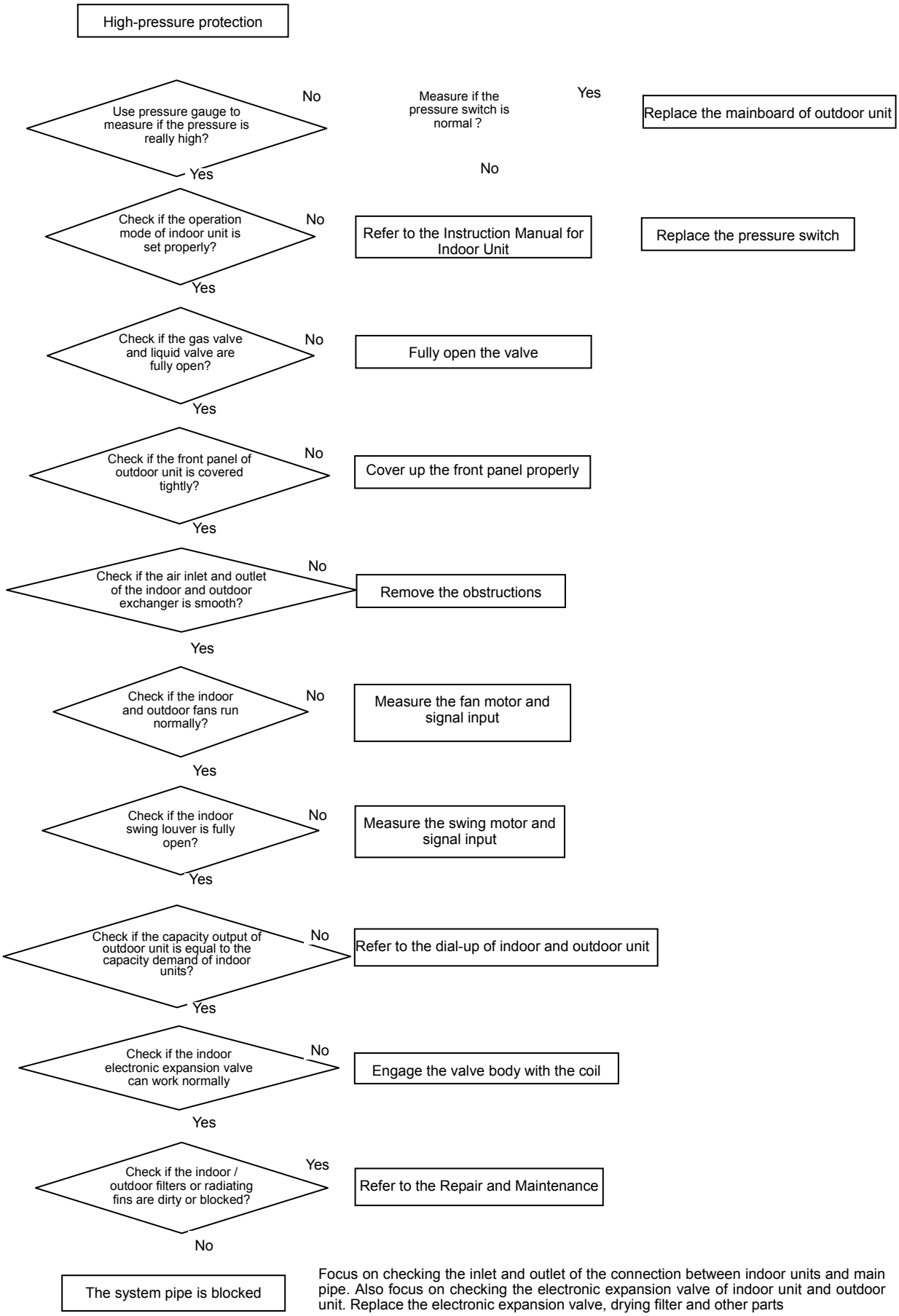

2.2 Low-pressure protection

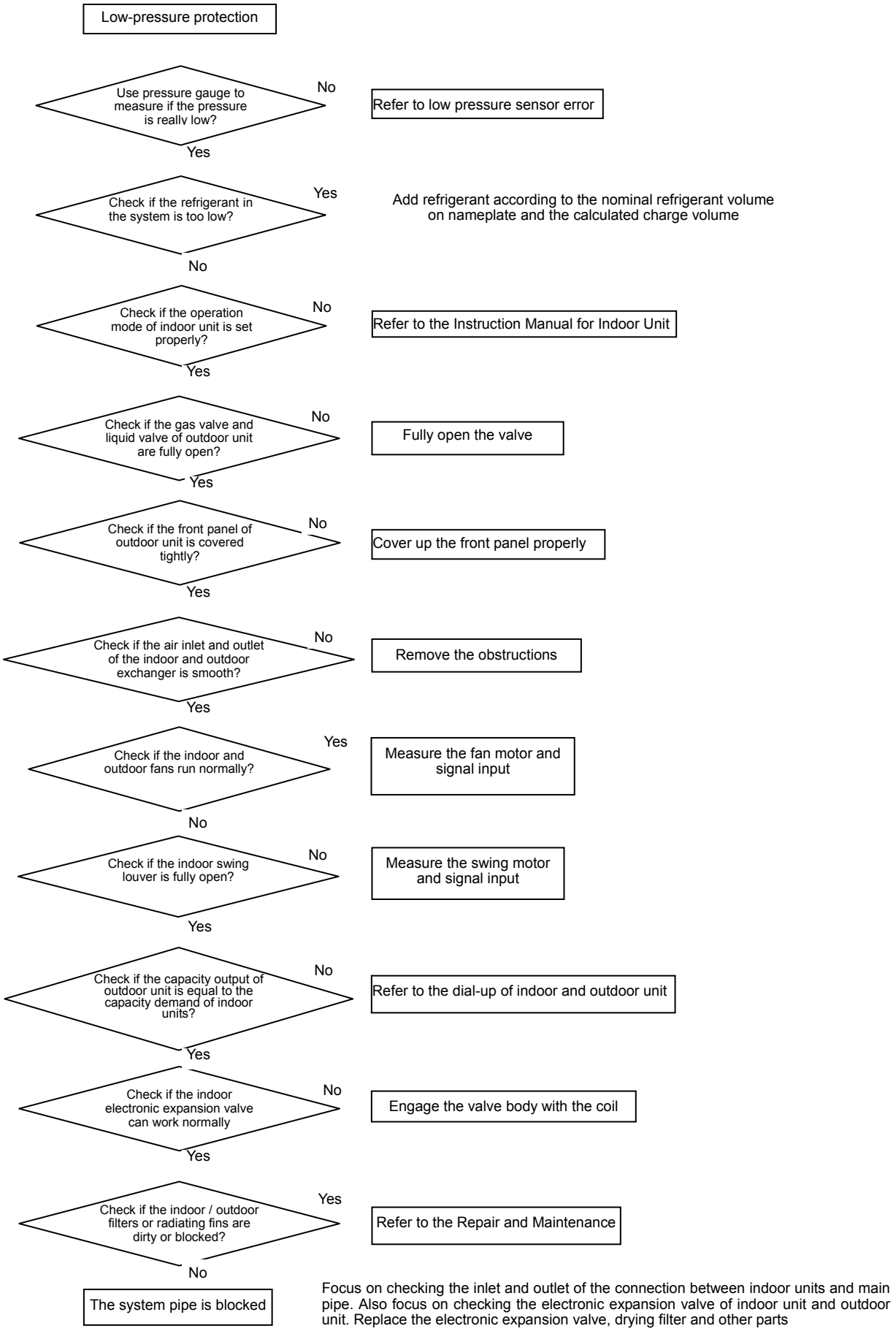

2.3 Exhaust Temperature Protection

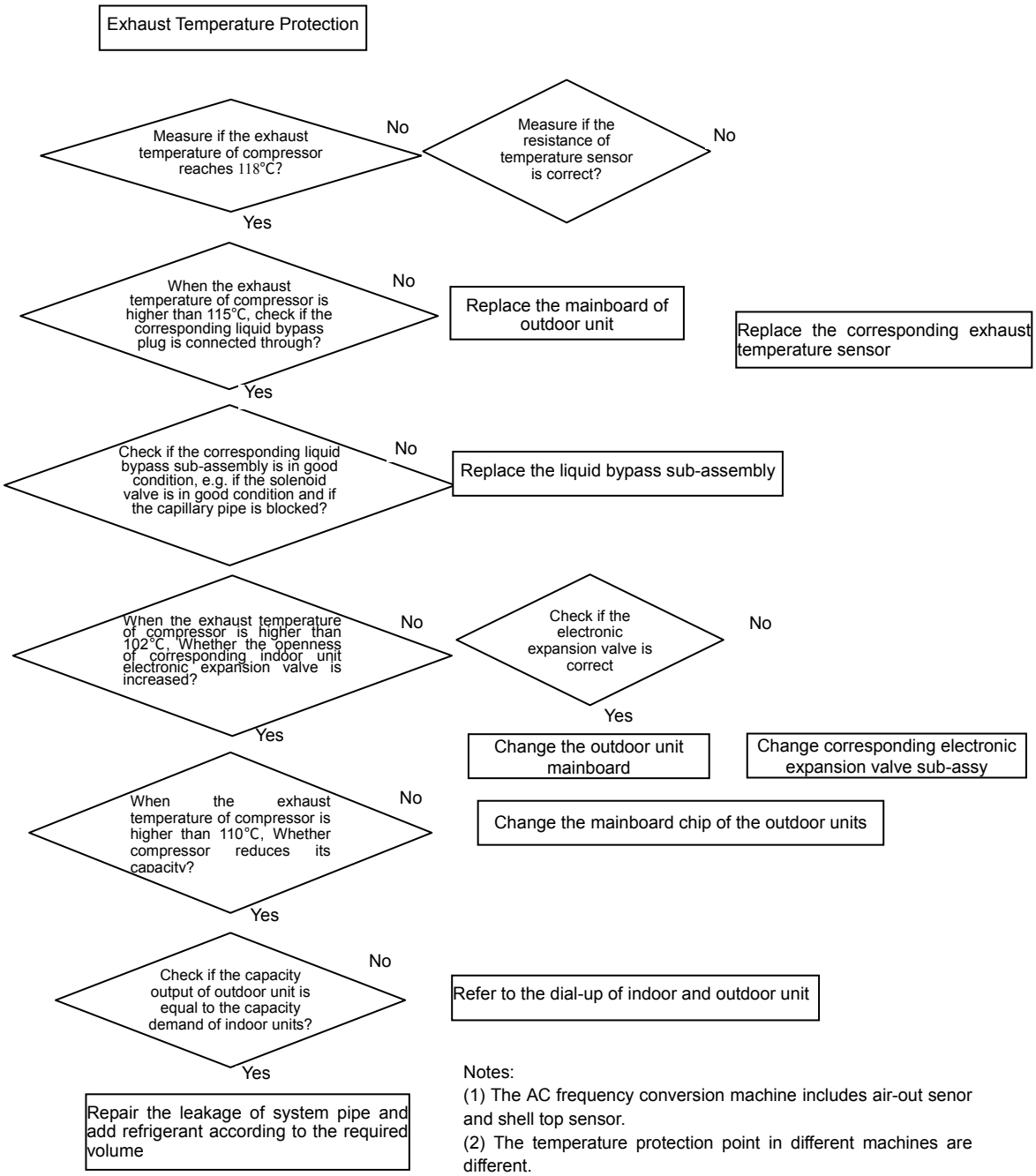

Notes:
(1) The AC frequency conversion machine includes air-out senor and shell top sensor.
(2) The temperature protection point in different machines are different.
(3) There is no liquid refrigerant by-pass in frequency conversion machine.

2.4 Compressor overcurrent protection

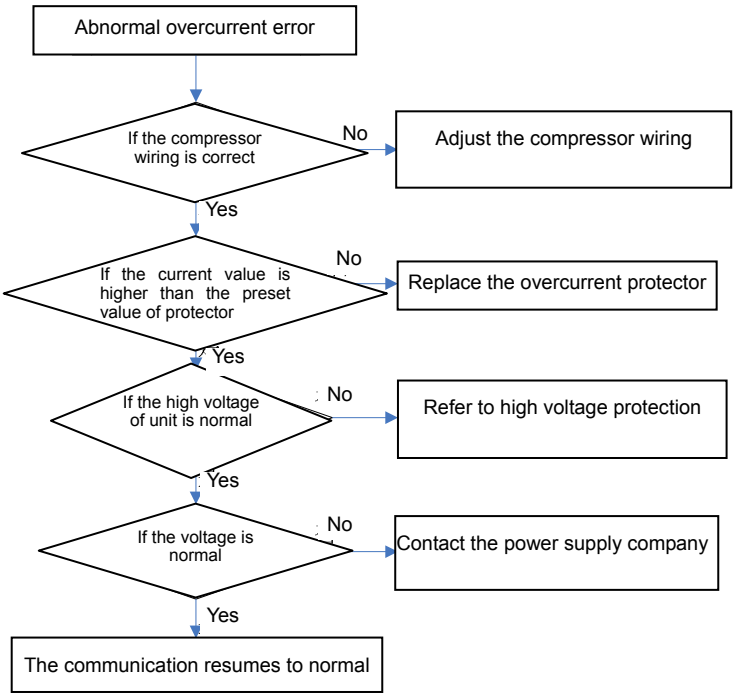

Upon AC inverter startup overcurrent, the indicator will display the current protection.

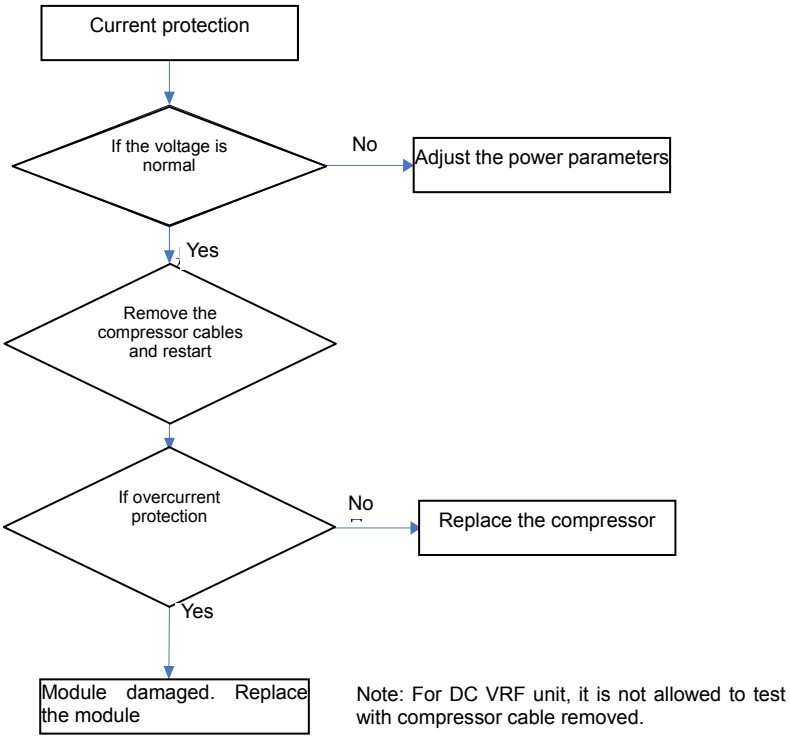

Overcurrent occurs in operation, i.e. the indicator will display the current protection just after startup.

Check the indoor units for matching

Within 135%

Correct the match of indoor units to allowable capacity

Check if the charge volume is too high

The charge volume is too high

Adjust to allowable range stated in the specifications

Use DC level to monitor P & N voltage of the module

Voltage stabilized 252-330V, with no fluctuation over 10V

DC capacitor damaged. Replace it

Compressor damaged; module damaged

2.5 Communication error

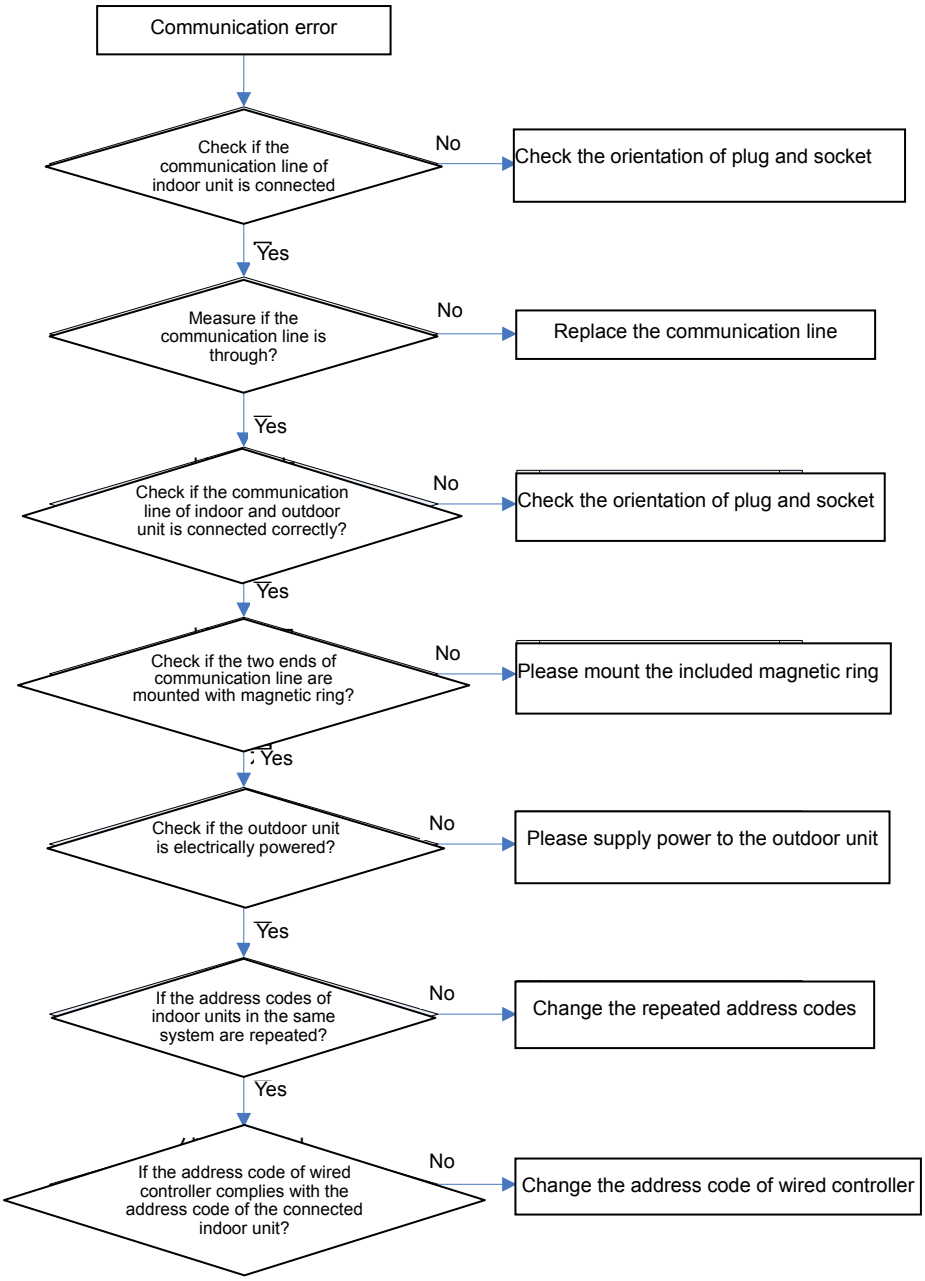

a) Water-full protection

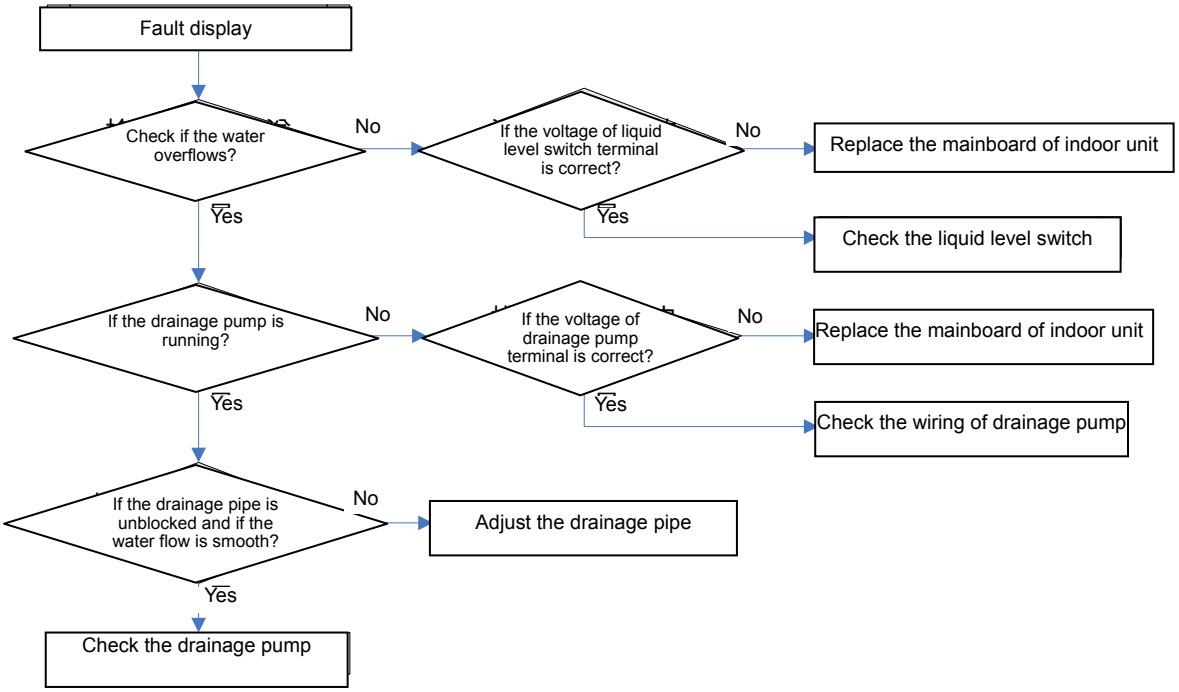

2.7 Error with room sensor, tube-inlet, tube middle and tube-exit sensor; error with room sensor, tube-inlet, tube middle and tube-exit sensor and exhaust / casing top sensor; error with the compressor bottom sensor

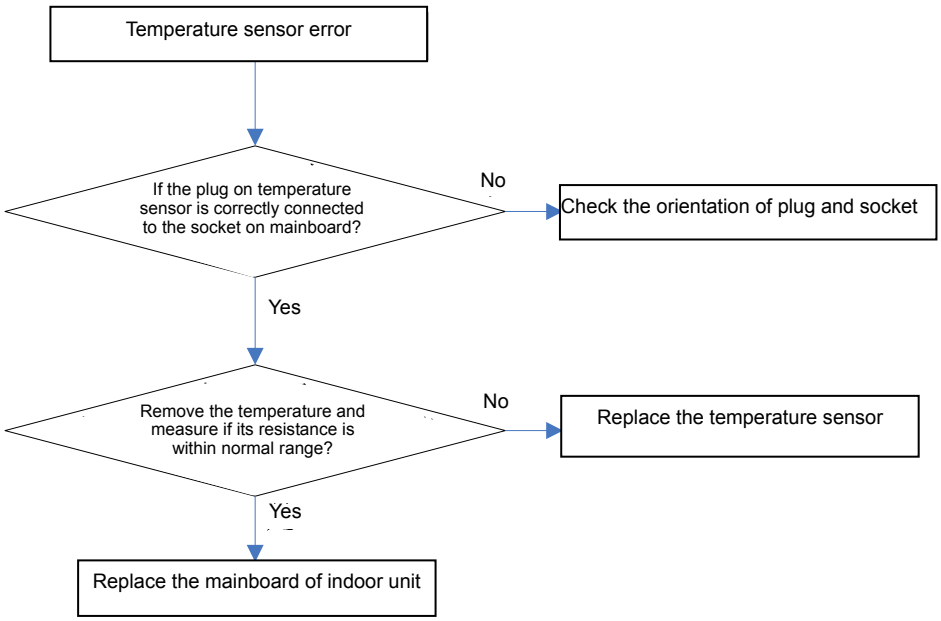

2.8 No energization to the unit and mainboard

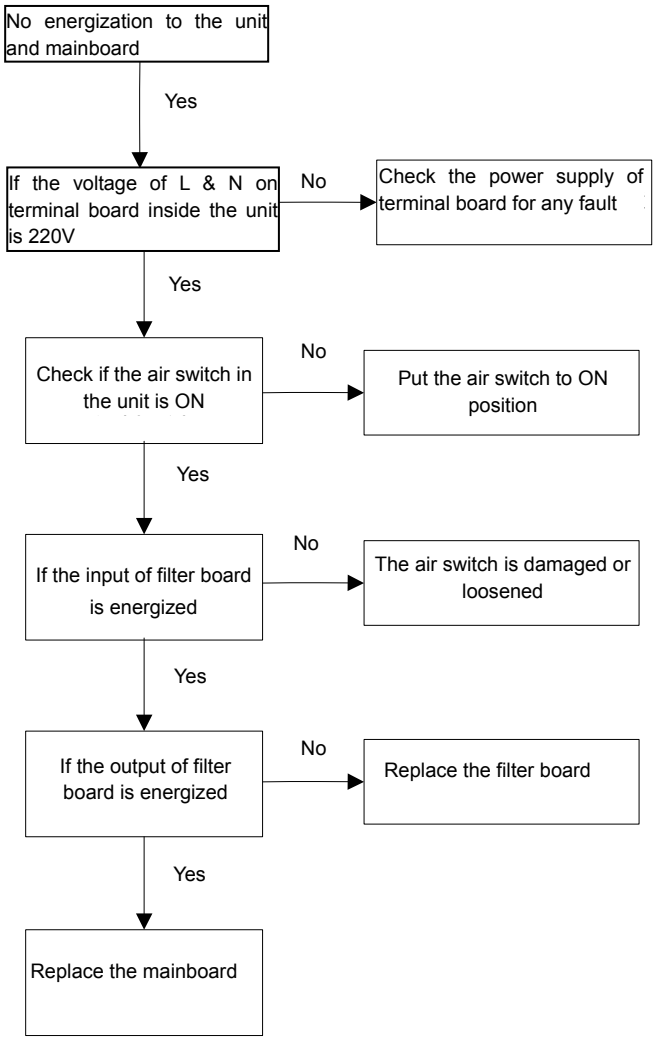

3.2 Introduction of Major Electrical Elements

Name	Photo	Function Introduction
Filter board		Main functions: 1) Filter the power interference and ensure the anti-interference ability of the unit under poor quality of power supply; 2) Inhibit the interference of the unit to the power supply and prevent the operation of unit from affecting other electric appliances like TV.
Air switch		For connecting and disconnecting the circuit of main loop, provided with overcurrent and short-circuit protection.

IPM module	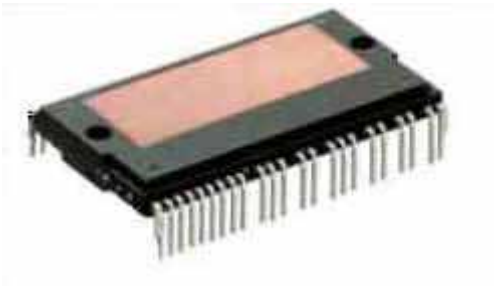	The IPM module integrates 3 pairs of complementary IGBT tube and controls their connection and disconnection via PWM wave, so that the DC bus voltage is applied to different stator windings of the compressor in different time section and the current is hence generated on the stator. Meanwhile, magnetic field is induced on the rotor windings, thus to push the rotor and drive the compressor to run.
PFC module		The PFC module integrates 4 diode tubes and 2 MOS tubes. They convert the AC input power into DC power. Meanwhile, the connection and disconnection of MOS tube is controlled via PWM wave, thus to realize the voltage rise under the function of electric induction.

3 WIRING DIADRAM

3.1 Outdoor unit

GMV(L)-Pd100W/NaB-K,GMV(L)-Pd120W/NaB-K,GMV(L)-Pd140W/NaB-K

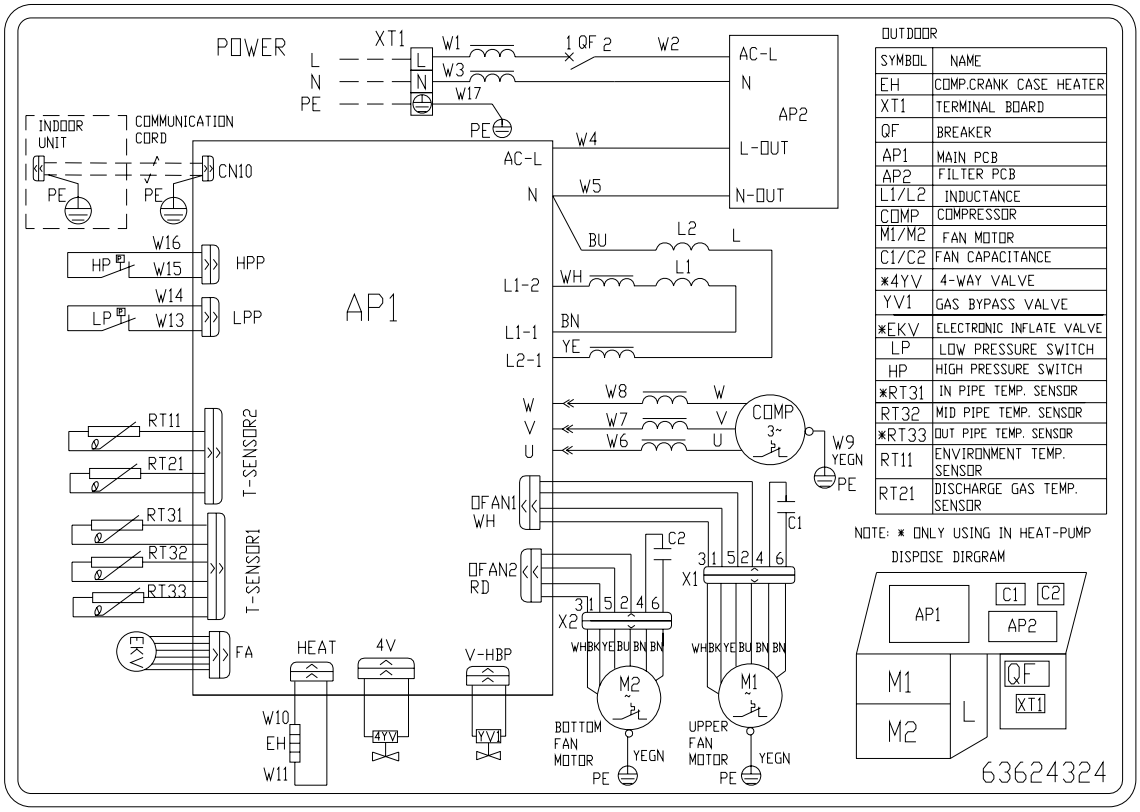

GMV(L)-Pd160W/NaB-K

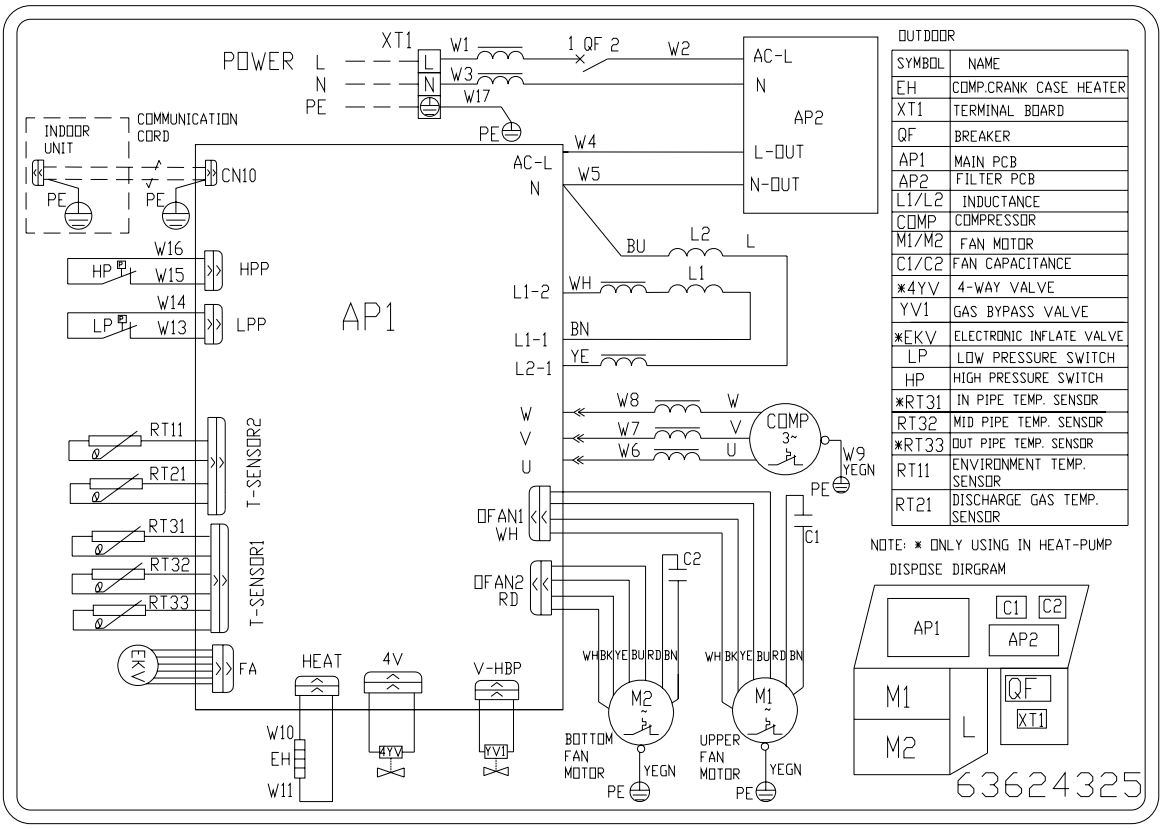

3.2 Indoor unit

GMV-R22P/Na-K,GMV-R25P/Na-K,GMV-R28P/Na-K,GMV-R36P/Na-K,GMVL-R22P/Na-K ,GMVL-R25P/Na-K,GMVL-R28P/Na-K,GMVL-R36P/Na-K

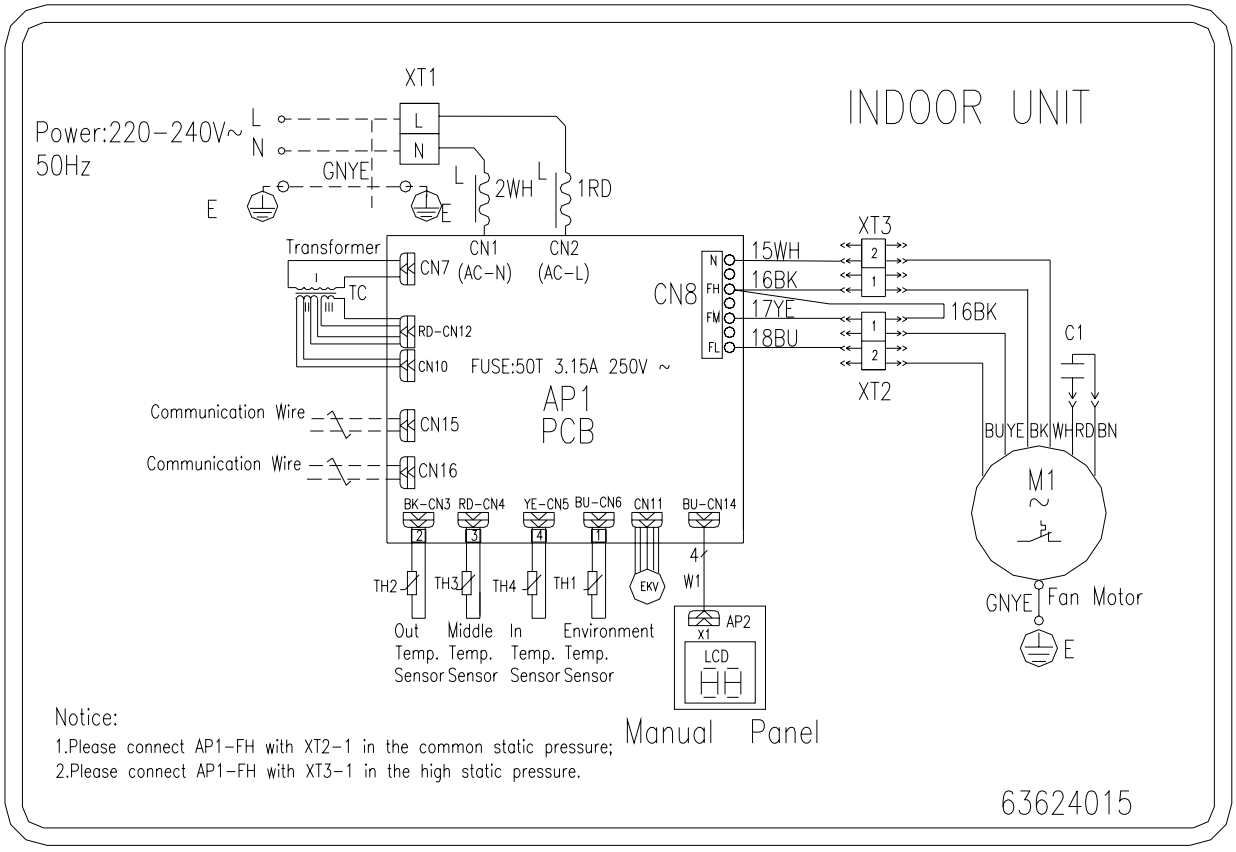

GMV-R45P/Na-K ,GMV-R50P/Na-K,GMVL-R45P/Na-K GMVL-R50P/Na-K,

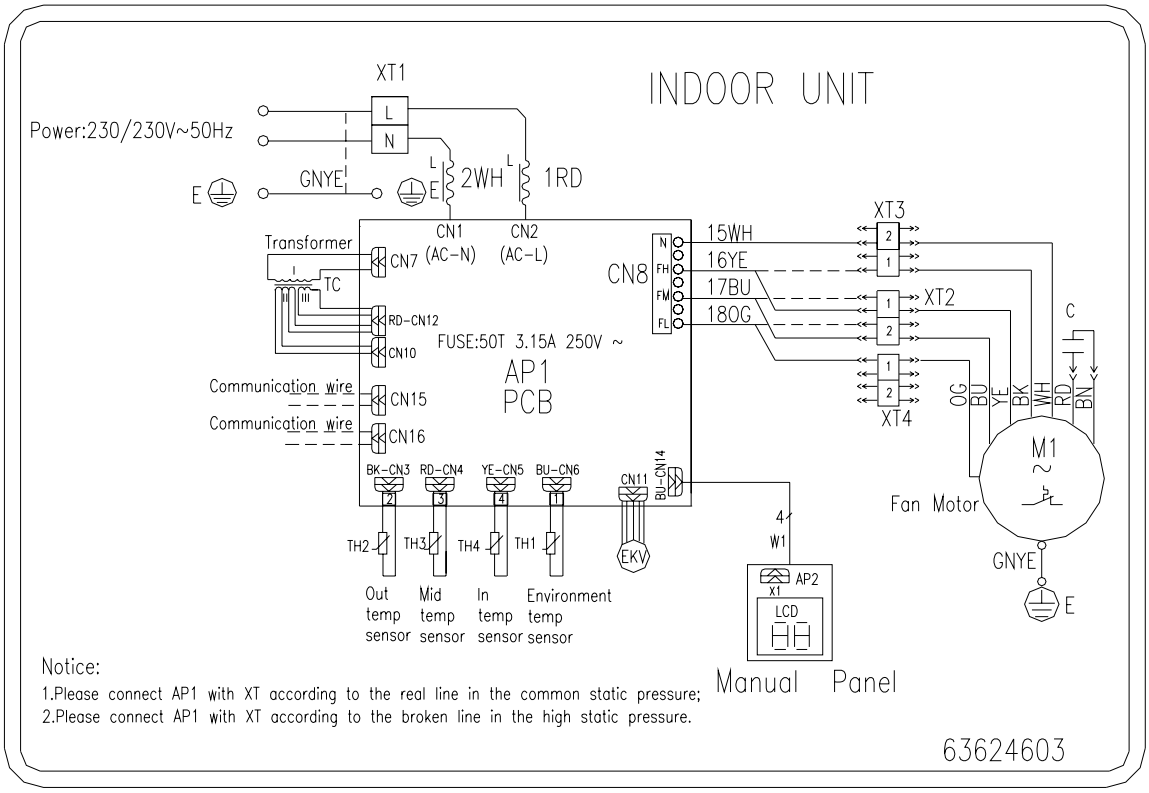

GMV-R56P/Na-K,GMV-R71P/Na-K,GMV-R80P/Na-K,GMVL-R56P/Na-K,GMVL-R71P/Na-K,GMVL-R80P/Na-K

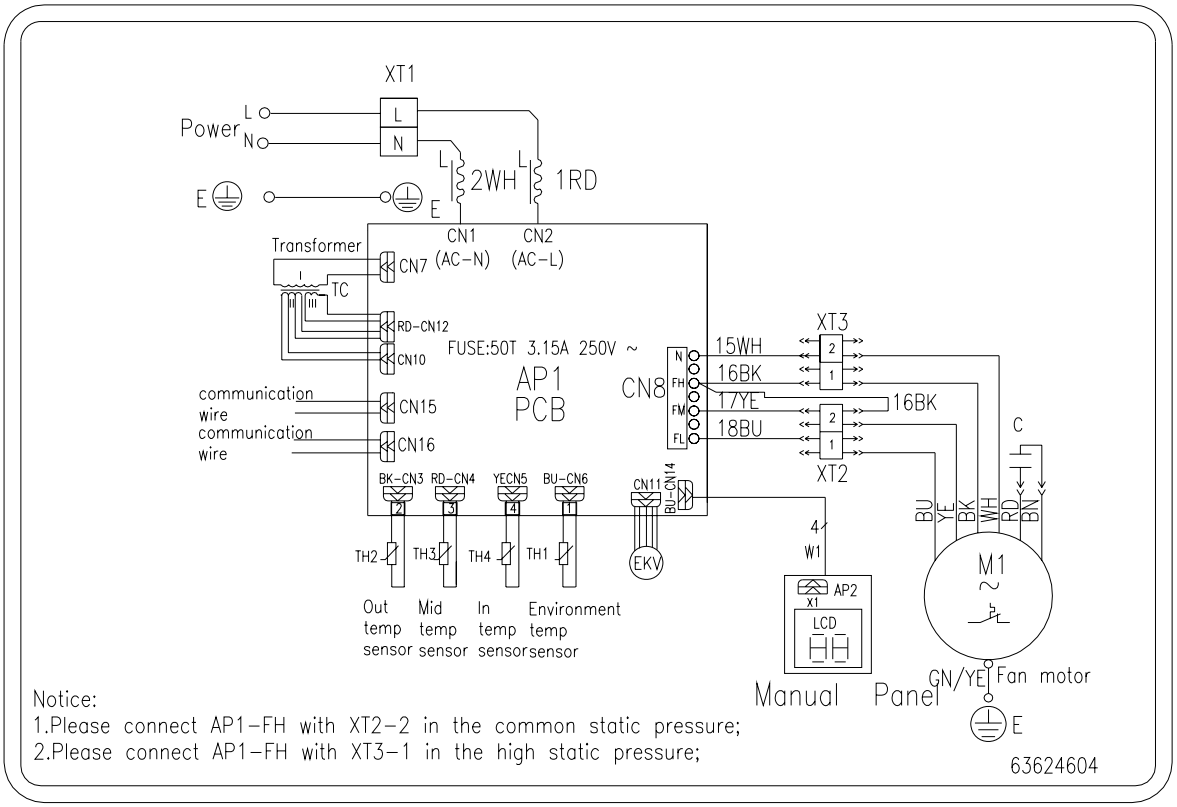

GMV-R90P/Na-K,GMV-R112P/Na-K,GMV-R140P/Na-K,GMVL-R90P/Na-K,GMVL-R112P/Na-K,GMVL-R140P/Na-K

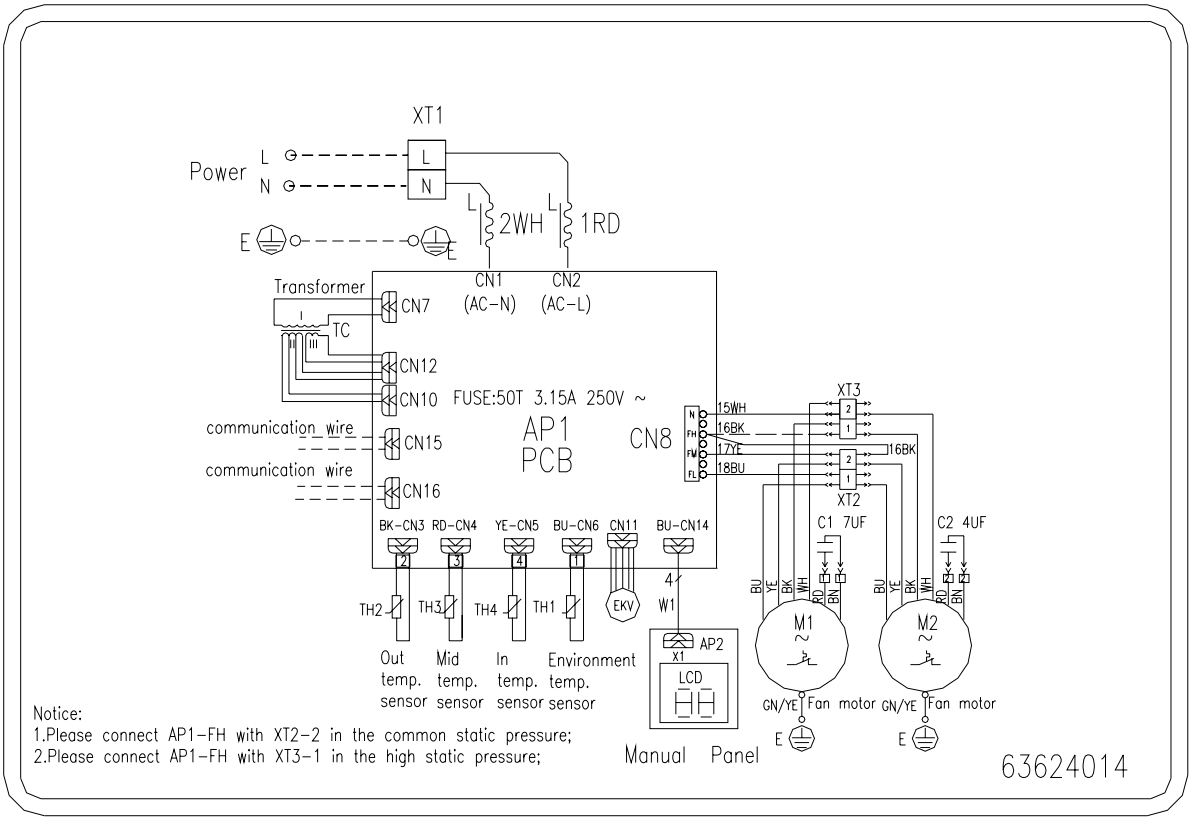

GMV-R125P/Na-K,GMVL-R125P/Na-K

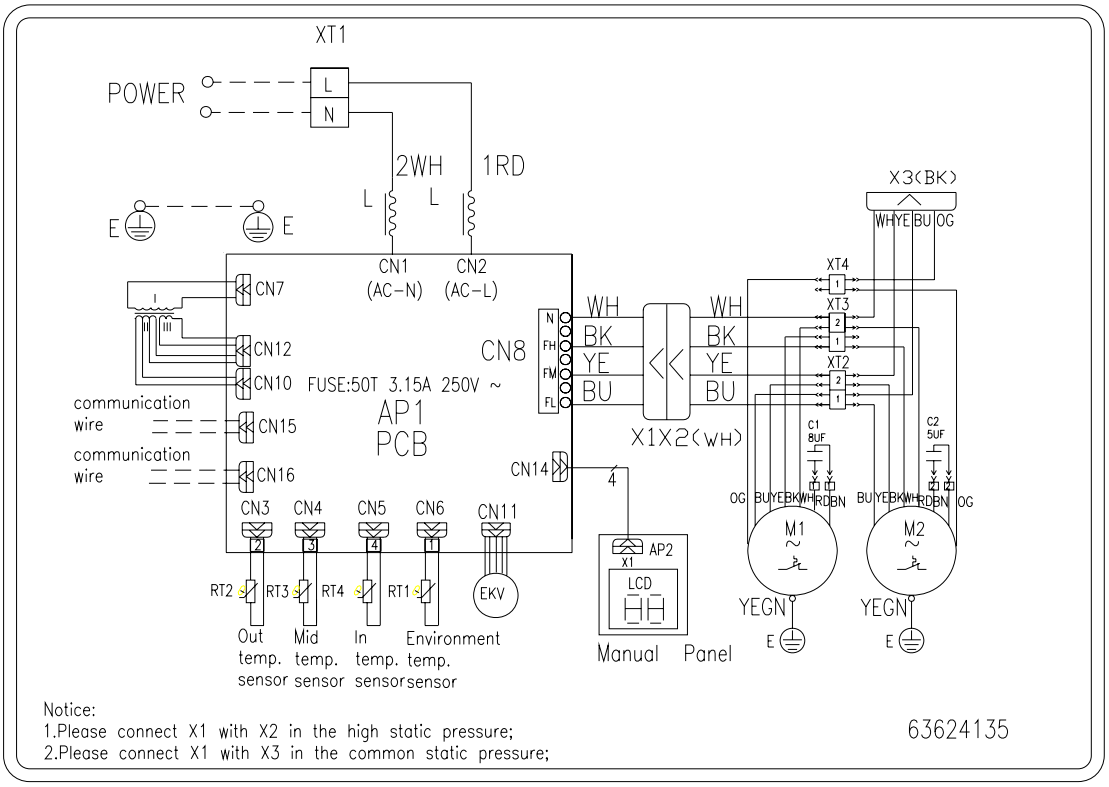

GMV-R22P/NaB-K、GMV-R28P/NaB-K、GMV-R36P/NaB-K、GMV-R45P/NaB-K、GMV-R56P/NaB-K、GMV-R71P/NaB-K

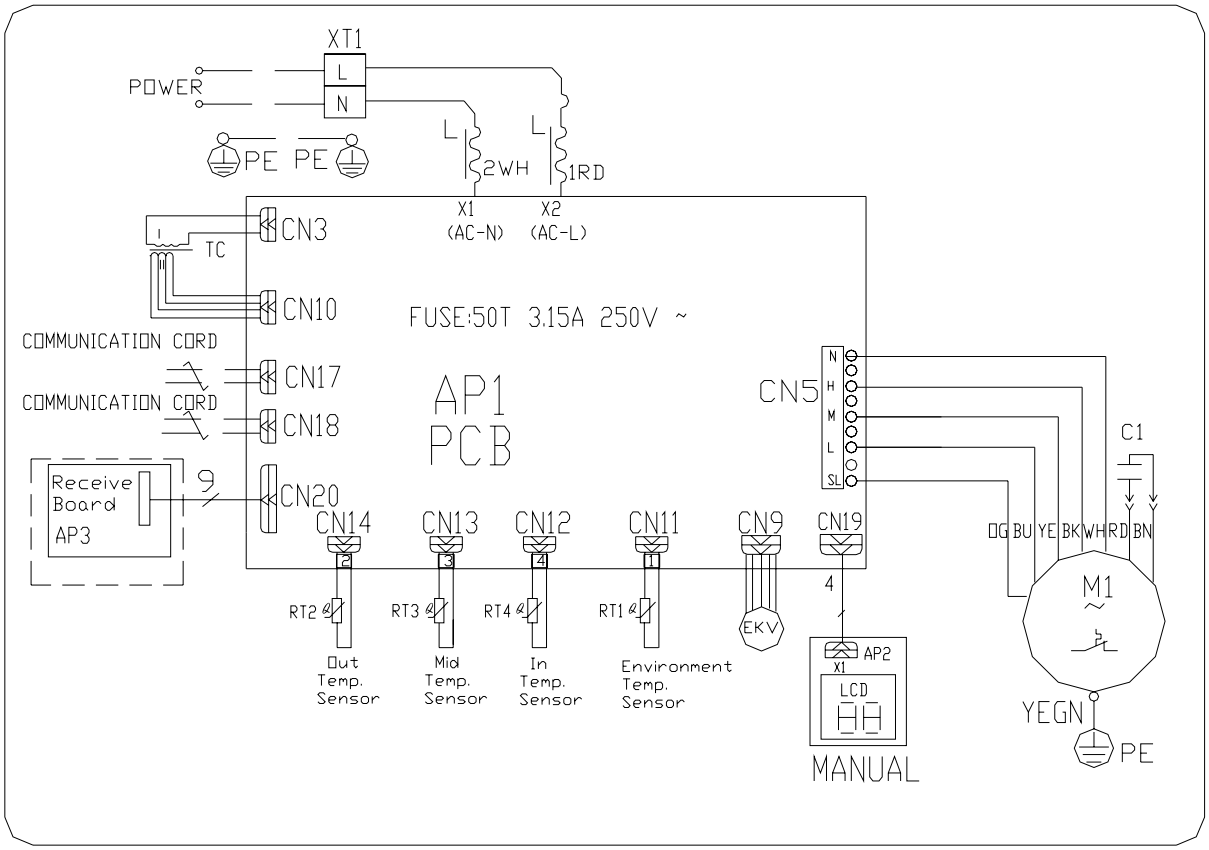

GMV-R90P/NaB-K、GMV-R112P/NaB-K、GMV-R140P/NaB-K

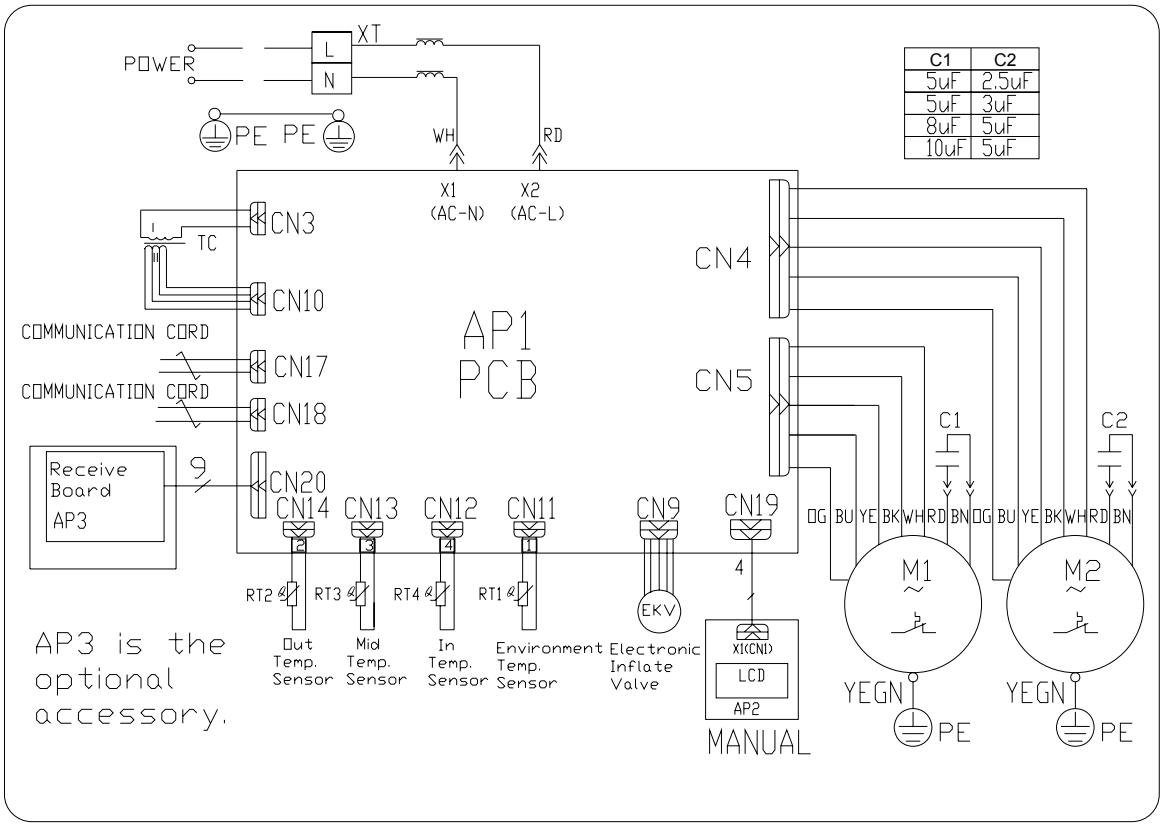

GMV-R22PS/NaB-K、GMV-R28PS/NaB-K、GMV-R36PS/NaB-K

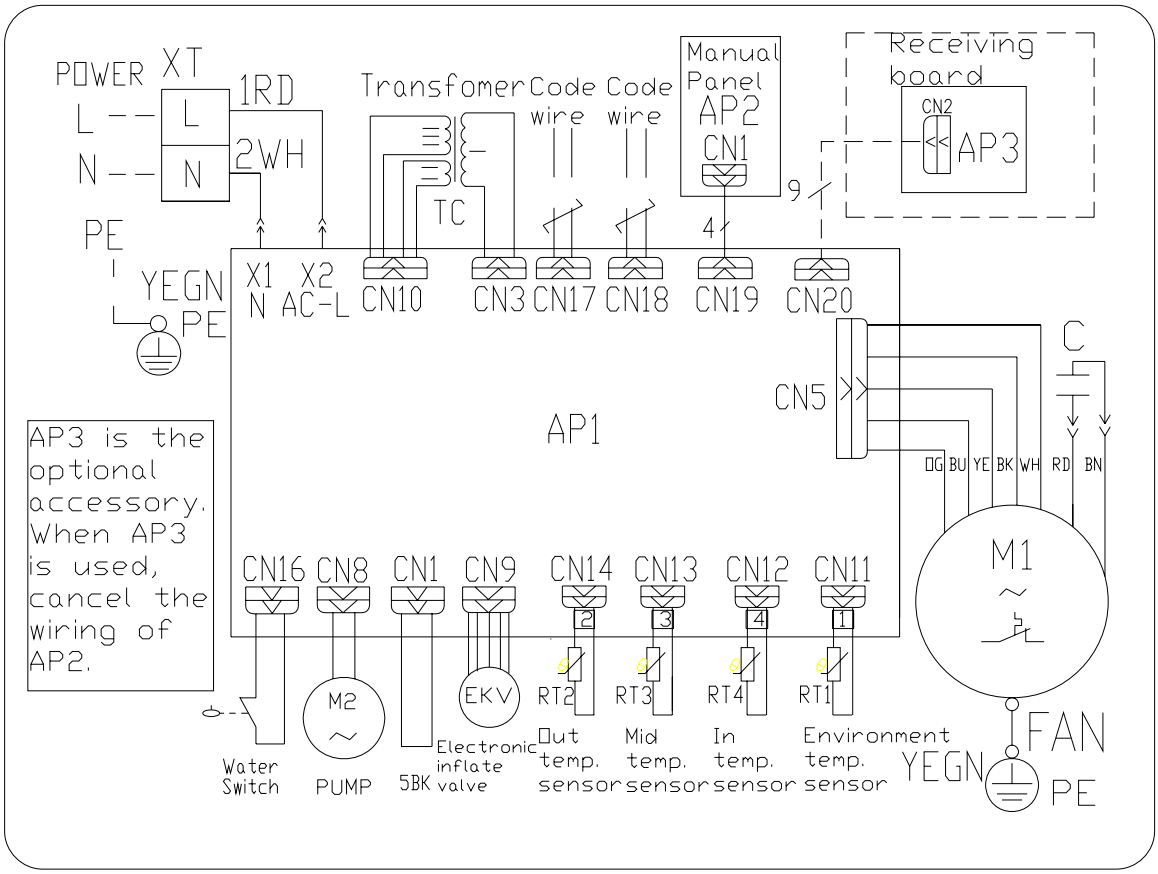

GMV-R45PS/NaB-K、GMV-R56PS/NaB-K、GMV-R71PS/NaB-K

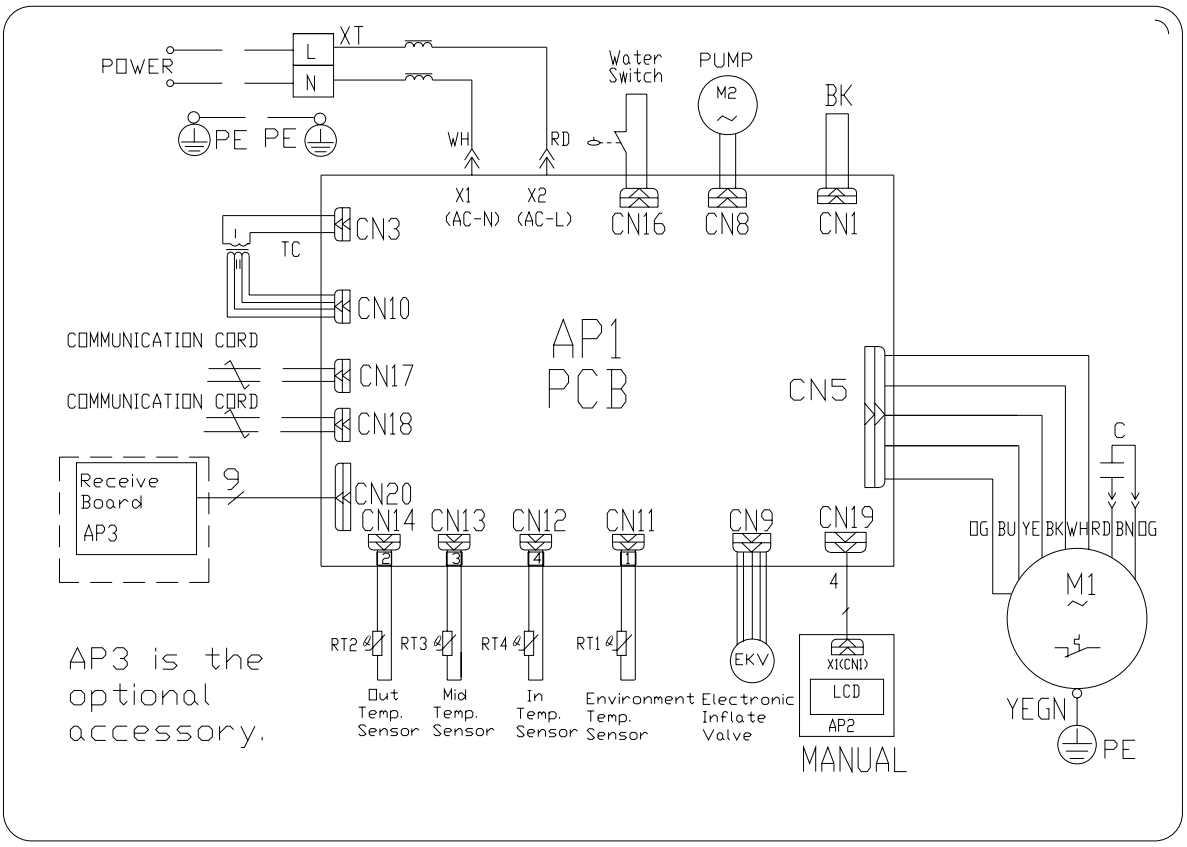

GMV-R90PS/NaB-K、GMV-R112PS/NaB-K、GMV-R140PS/NaB-K

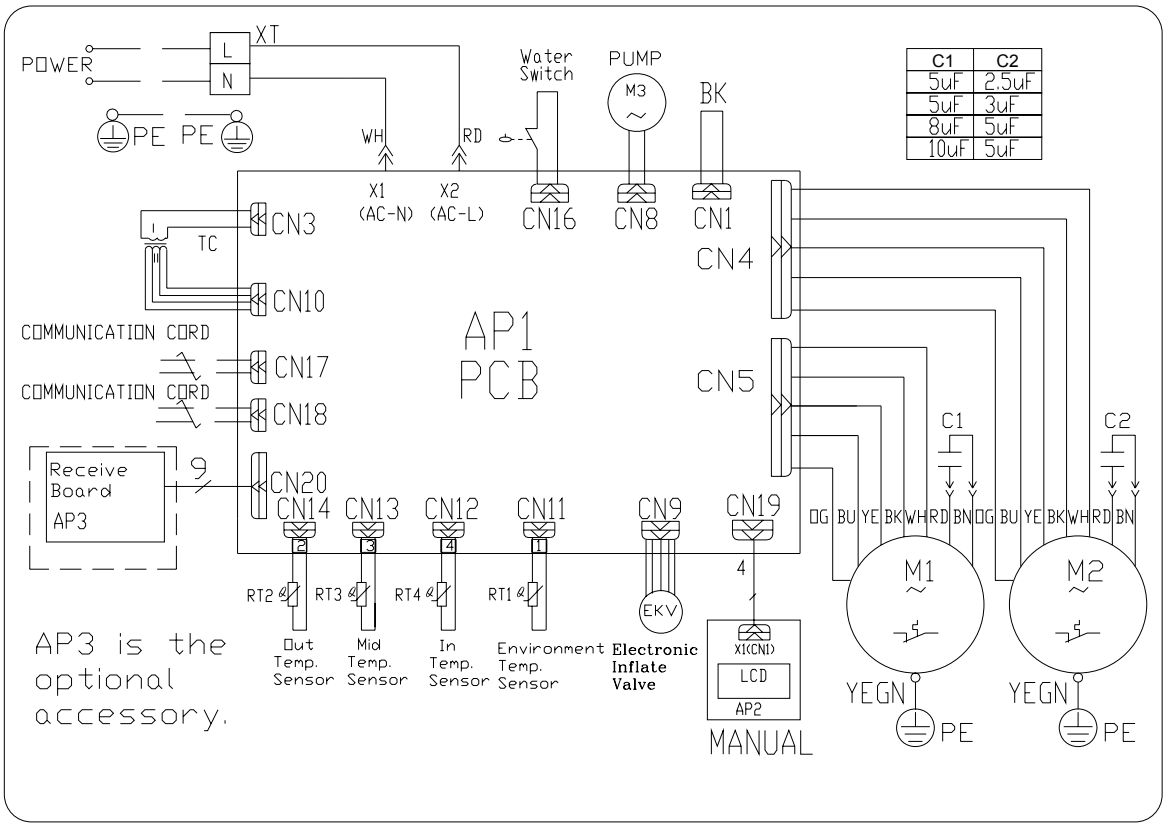

GMV-R22T/NaA-K、GMV-R28T/NaA-K、GMV-R36T/NaA-K、GMV-R45T/NaA-K

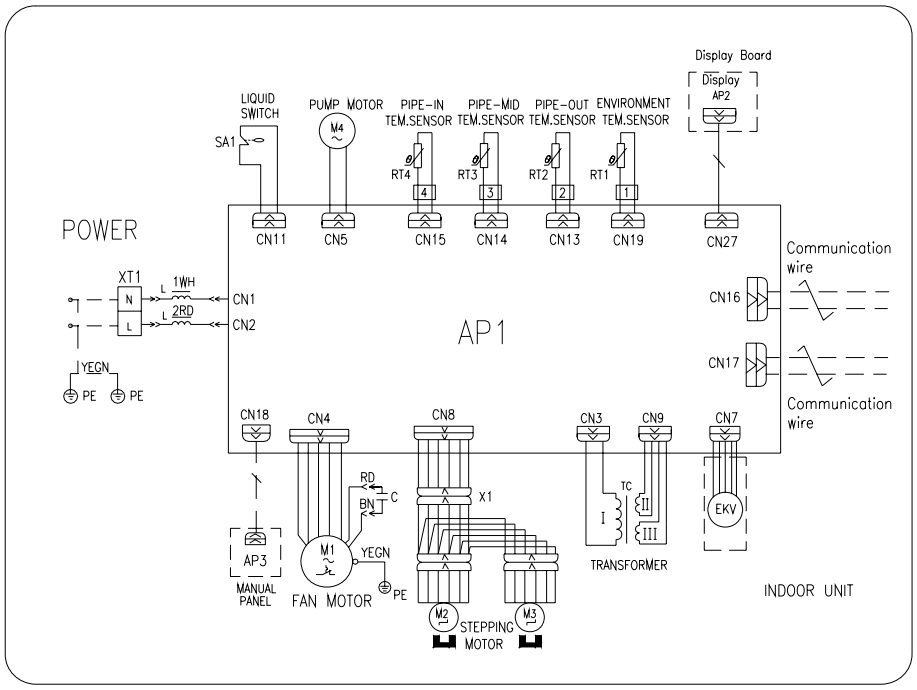

GMV-R28T/Na-K,GMV-R36T/Na-K,GMV-R45T/Na-K,GMV-R50T/Na-K,GMV-R56T/Na-K,GMV-R71T/Na-K,GMV-R80T/Na-K,GMV-R90T/Na-K,GMV-R112T/Na-K,GMV-R125T/Na-K,GMV-R140T/Na-K,GMVL-R28T/Na-K,GMVL-R36T/Na-K,GMVL-R45T/Na-K,GMVL-R50T/Na-K,GMVL-R56T/Na-K,GMVL-R71T/Na-K,GMVL-R80T/Na-K,GMVL-R90T/Na-K,GMVL-R112T/Na-K,GMVL-R125T/Na-K,GMVL-R140T/Na-K

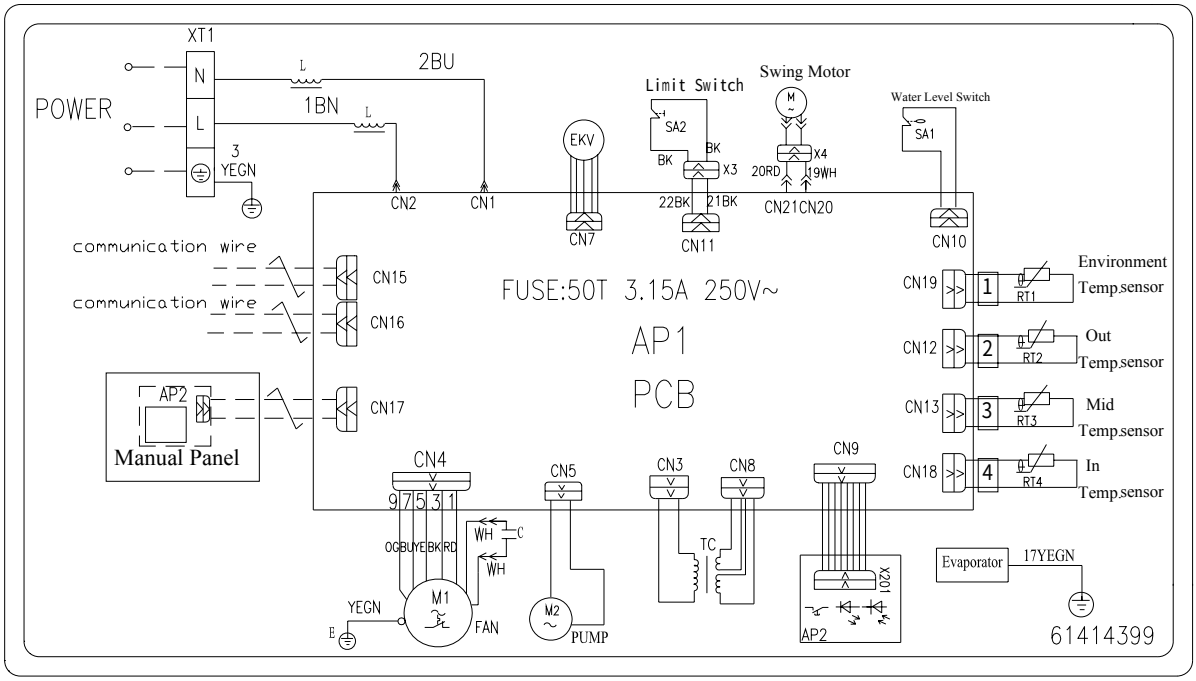

GMV-R22G/NaB-K,GMVL-R22G/NaB-K,GMV-R28G/NaB-K,GMVL-R28G/NaB-K,GMV-R36G/NaB-K,GMVL-R36G/NaB-K,GMV-R45G/NaB-K,GMVL-R45G/NaB-K

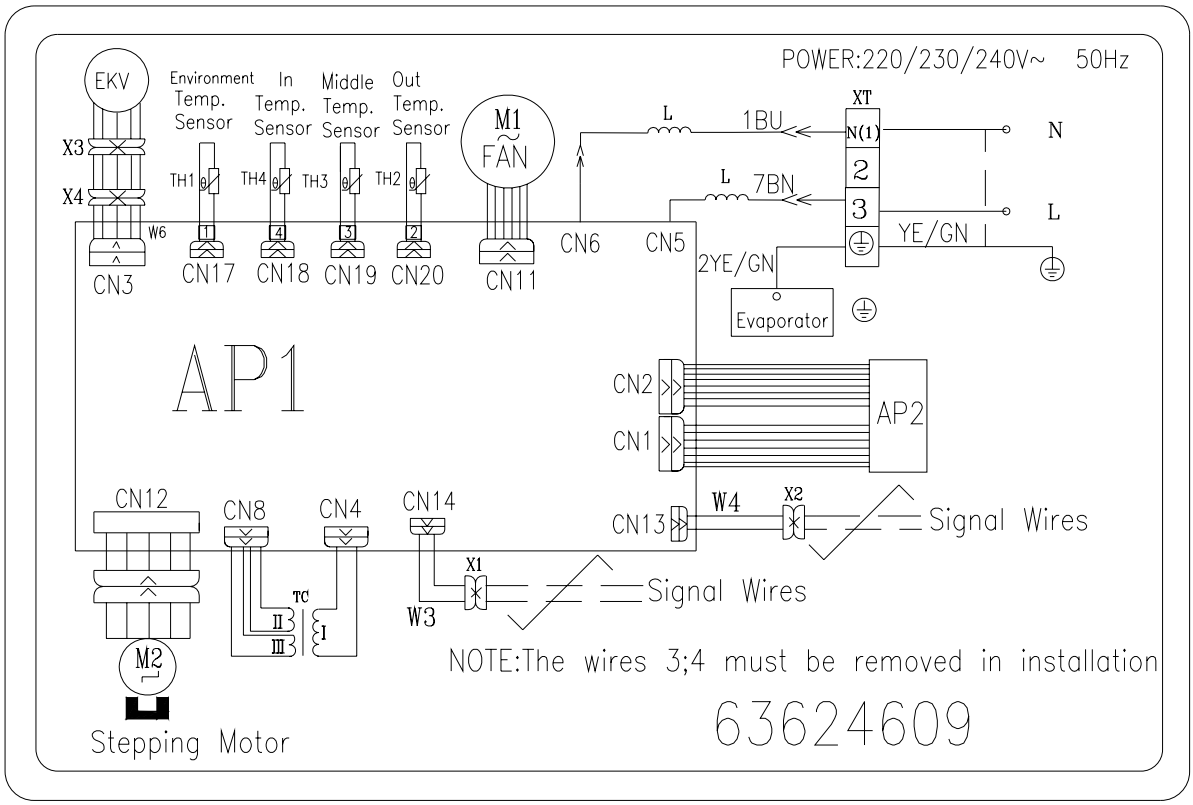

GMV-R50G/NaB-K,GMV-R56G/NaB-K,GMVL-R50G/NaB-K,GMVL-R56G/NaB-K

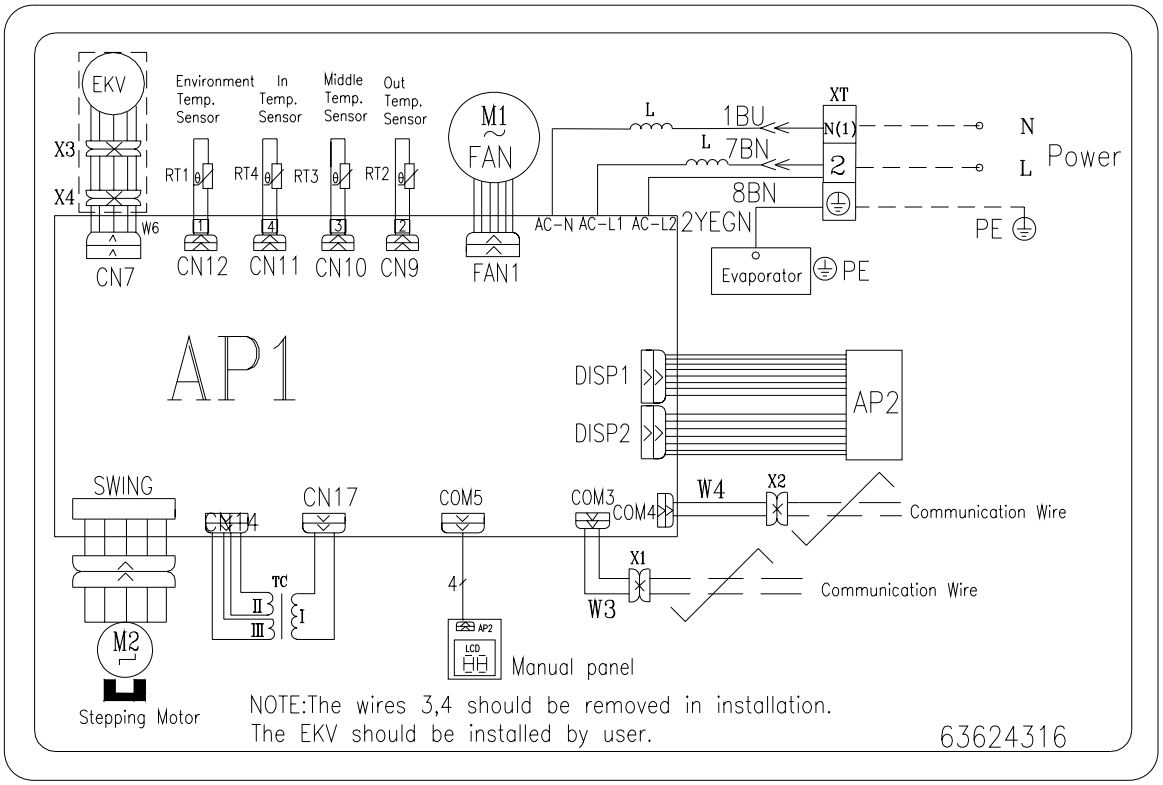

GMV-R22G/NaC-K,GMV-R28G/NaC-K ,GMV-R36G/NaC-K,GMV-R45G/NaC-K,GMVL-R22G/NaC-K,GMVL-R28G/NaC-K ,GMVL-R36G/NaC-K,GMVL-R45G/NaC-K

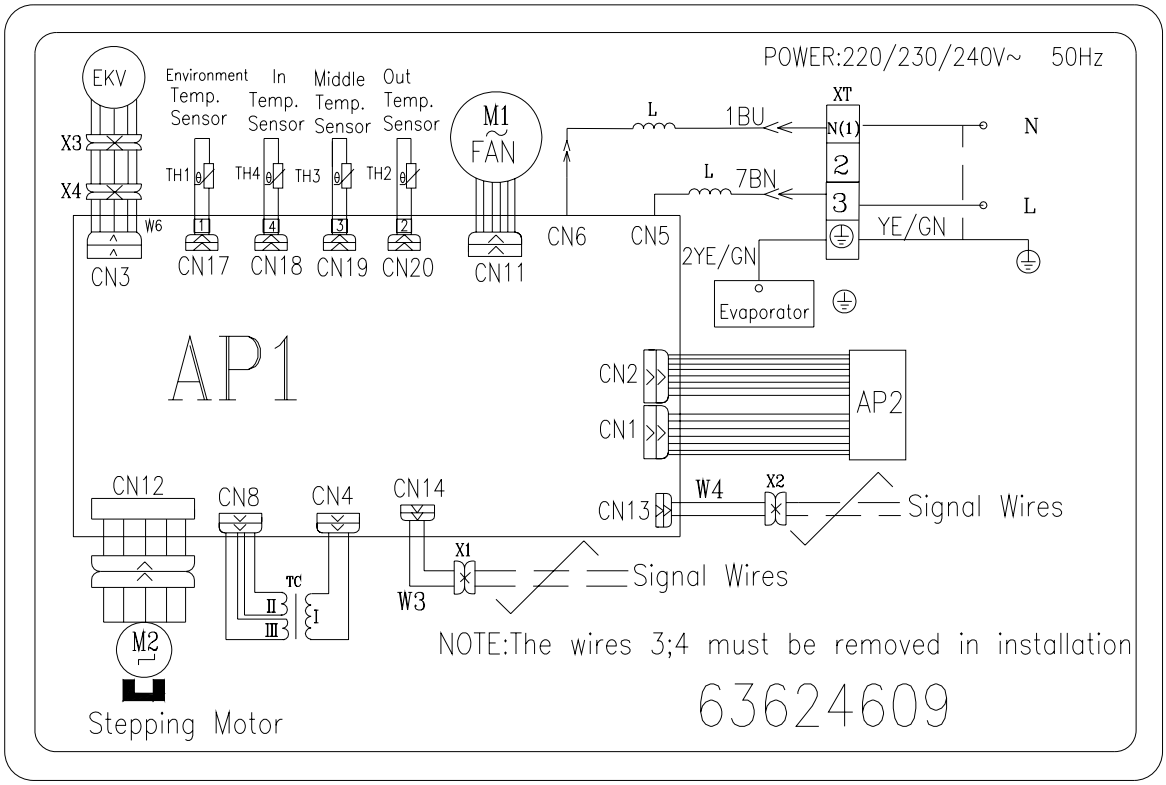

GMV-R71G/Na-K,GMV-R80G/Na-K,GMVL-R71G/Na-K,GMVL-R80G/Na-K

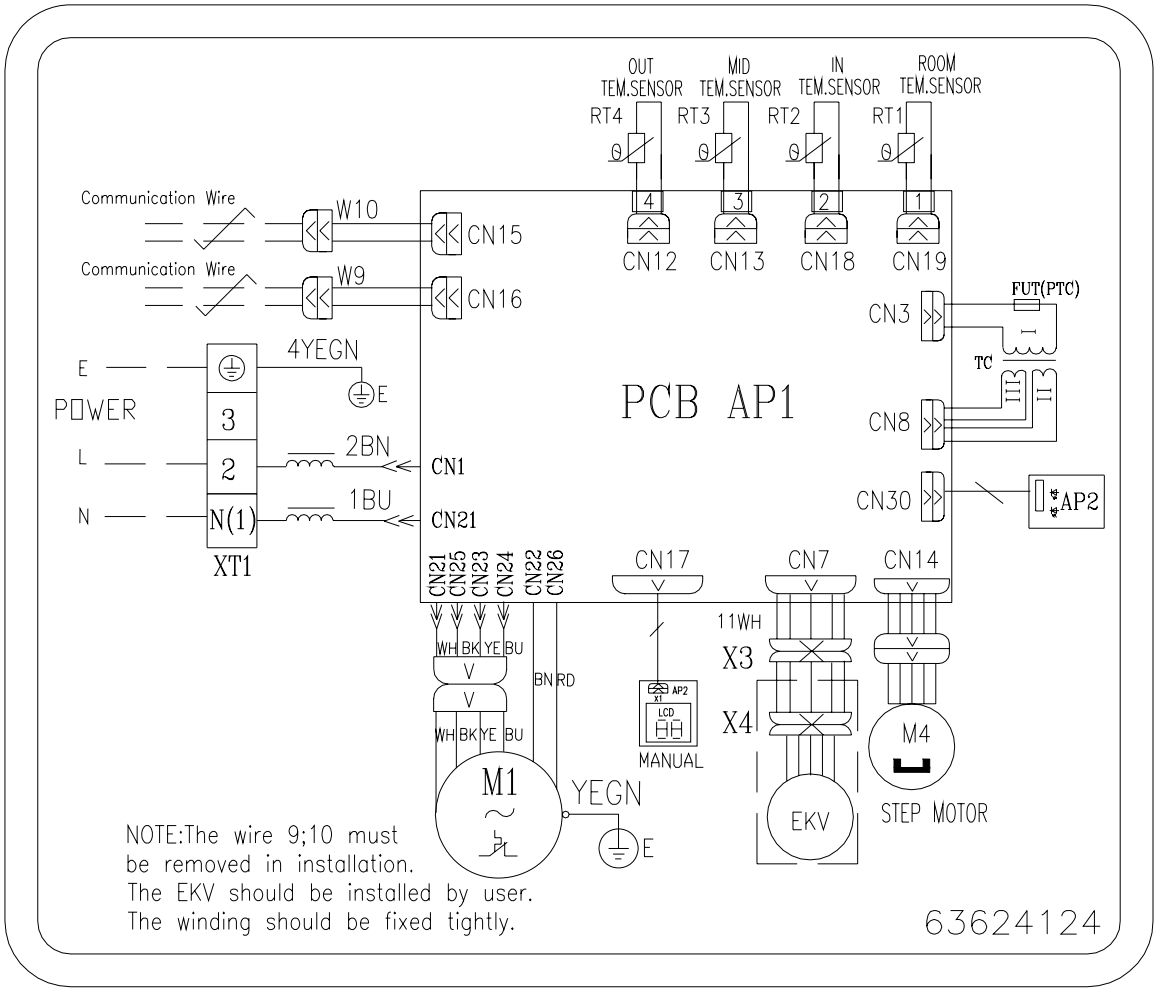

GMV-R28Zd/Na-K,GMV-R36Zd/Na-K,GMV-R50Zd/Na-K,GMV-R71Zd/Na-K,GMV-R90Zd/Na-K,GMV-R112Zd/Na-K,GMV-R125Zd/Na-K,GMVL-R28Zd/Na-K,GMVL-R36Zd/Na-K,GMVL-R50Zd/Na-K,GMVL-R71Zd/Na-K,GMVL-R90Zd/Na-K,GMVL-R112Zd/Na-K,GMVL-R125Zd/Na-K

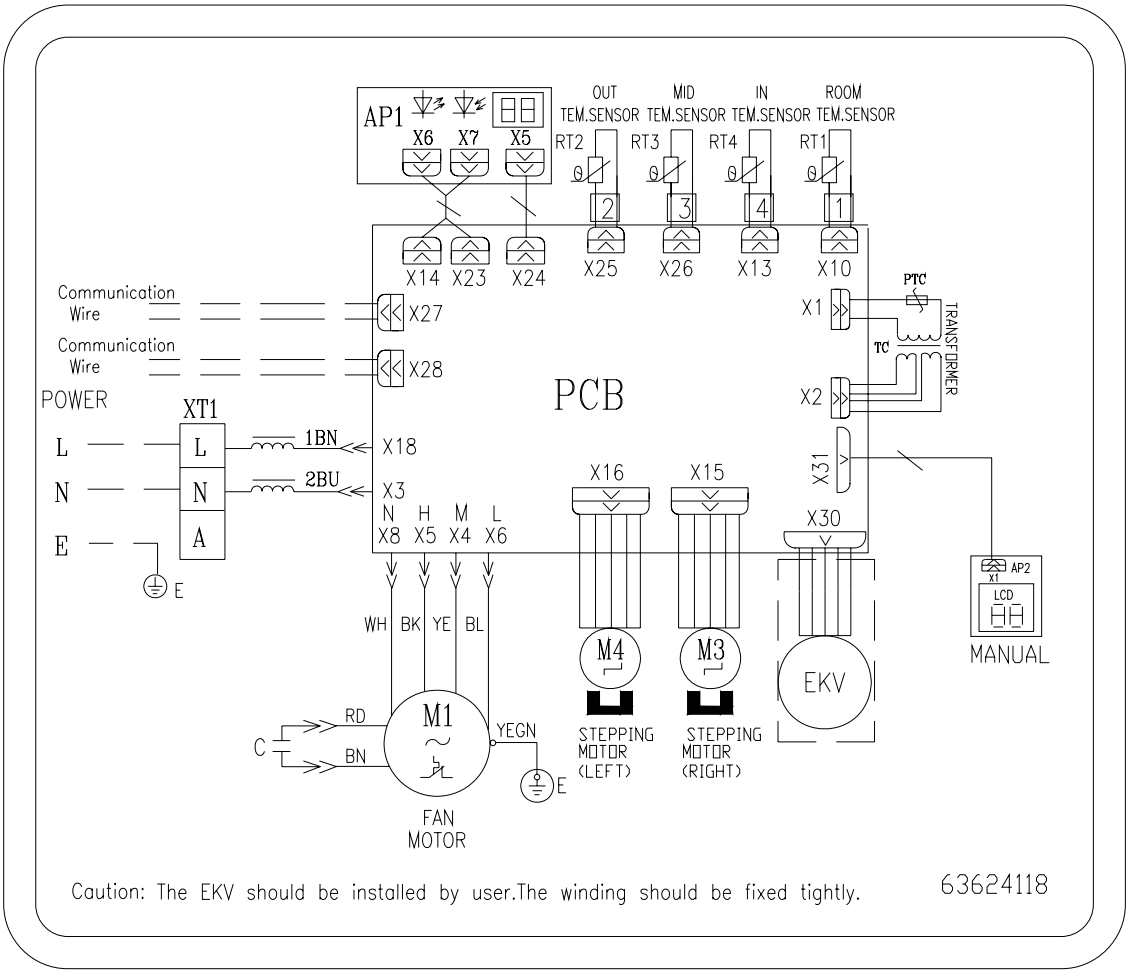

GMV-R22Td/Na-K,GMV-R28Td/Na-K,GMV-R36Td/Na-K

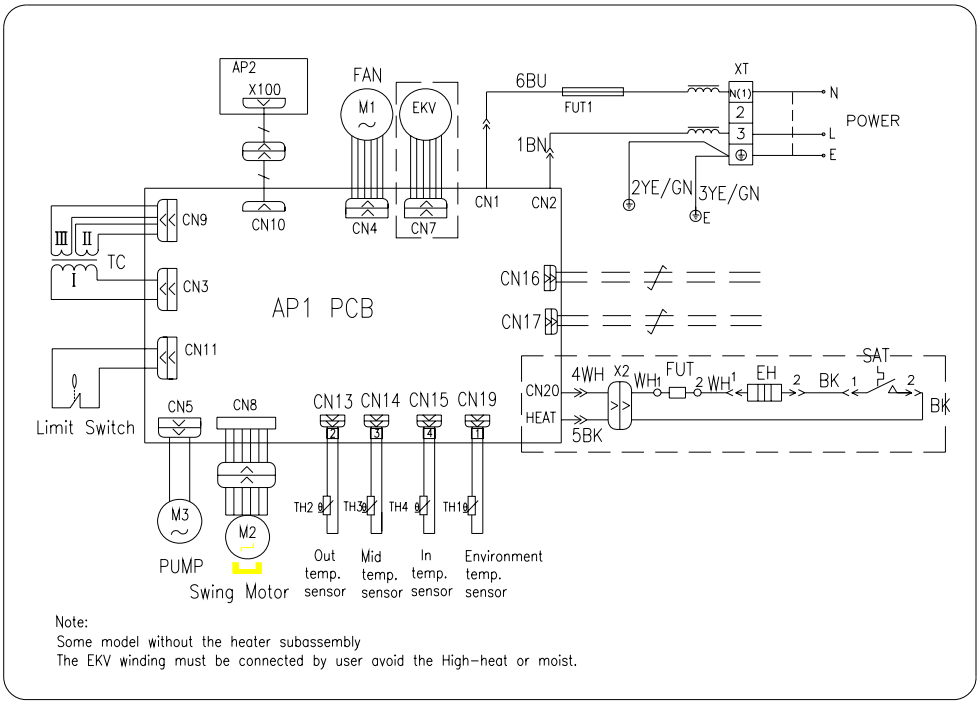

4 DISASSEMBLY AND ASSEMBLY PROCEDURE OF MAIN PARTS

4.1 Removal and Assembly of Outdoor Unit

Outdoor Unit of Side Outlet Structure

Removal and Installation of Compressor		
Remark: Before removing the compressor, make sure that there is no refrigerant inside the pipe system and that the power has been cut off.		
Step	Illustration	Handling Instruction
1. Remove the power cord	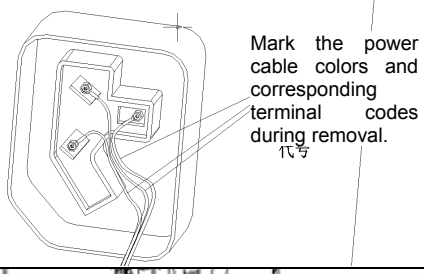	●Use screwdriver to loosen the screws fixing the power cable. ●Pull out the power cable. Note: When removing the power cable, please mark the power cable color and corresponding terminal, thus to avoid error during reinstallation.
2. Loosen the nuts fixing the compressor onto foundation.	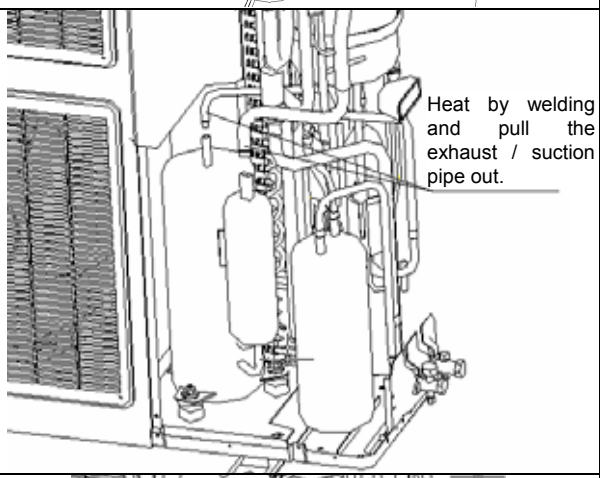	●Firstly, heat the connection pipe of compressor by welding; ● Then, pull out the connection pipe. Note: During welding, take care not to let the flame burn other elements.
3 Loosen the nuts fixing the compressor onto foundation.	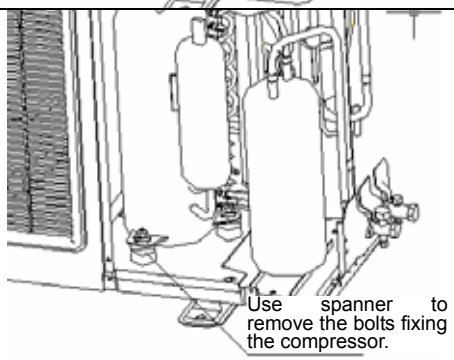	●Use spanner to loosen the nuts fixing the compressor onto the base seat
4. Remove the compressor from chassis	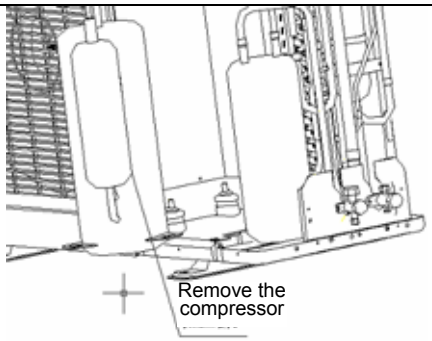	●Remove the compressor and replace it Note: When replacing the compressor, take care not to touch the pipes and components beside.

5. Fix the new compressor to chassis	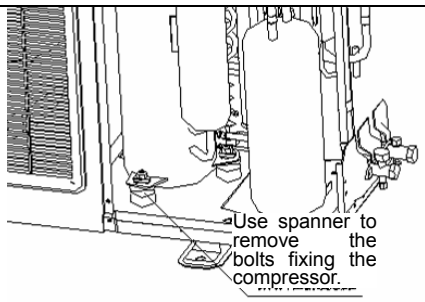	●Replace the compressor and tighten the nuts fixing onto the base seat.
6. Connect the suction and exhaust pipe of compressor to system pipeline	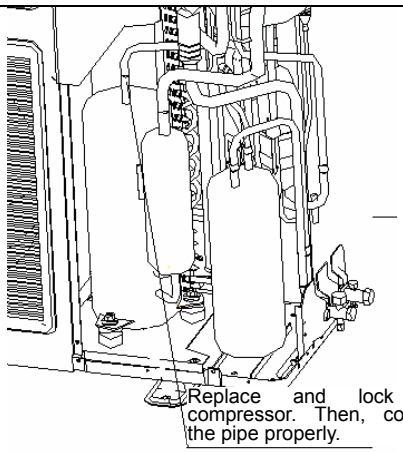	●Weld the connection pipe of compressor and connect it to the compressor Note: During welding, take care not to let the flame burn other elements.
7. Connect the power cables of compressor correctly	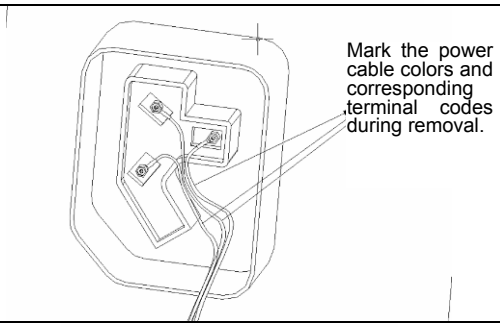	●Use screwdriver to tighten the screws fixing the power cable. ●Connect the power cable correctly Note: When connecting the power cable, please take care on the marking of power cable color and corresponding terminal code.
8. Check and open the cover plate	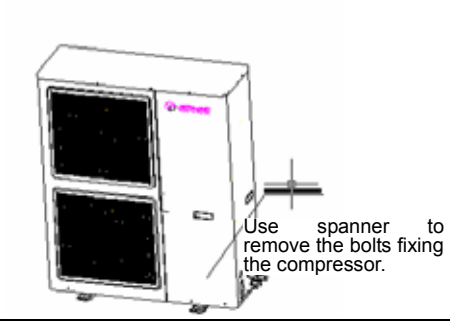	● Check if the pipe is connected properly; ● Check if the pipe is connected properly; ●If no problem, close the front and back cover plate.

Disassembly and Assembly of 4-way valve		
Step	Illustration	Handling Instruction
1. Disconnect the 4-way valve from liquid bypass.	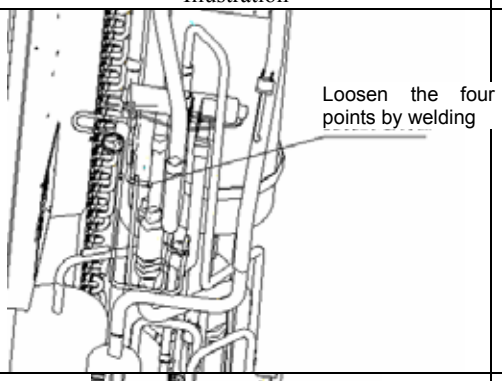	● Firstly, remove the coil of 4-way valve. ● Loosen the liquid bypass sub-assembly by welding; then, pull out the connection pipe. Note: During welding, take care not to let the flame burn other elements.
2. Disconnect the 4-way valve from the pipe	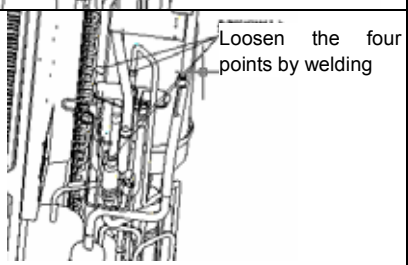	●Loosen the four joints on 4-way valve sub-assembly by welding; then, pull out the connection pipe. Note: During welding, take care not to let the flame burn other elements.
3. Replace the 4-way valve and weld the 4-way valve to connection pipe	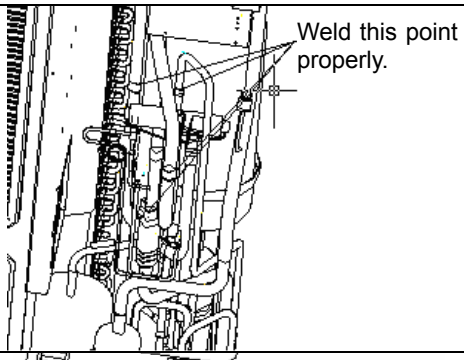	●Replace the 4-way valve and then weld the four joints on 4-way valve sub-assembly. Replace the 4-way valve and then weld the four joints on 4-way valve sub-assembly.
4. Replace the 4-way valve and weld the 4-way valve to liquid bypass sub-assembly	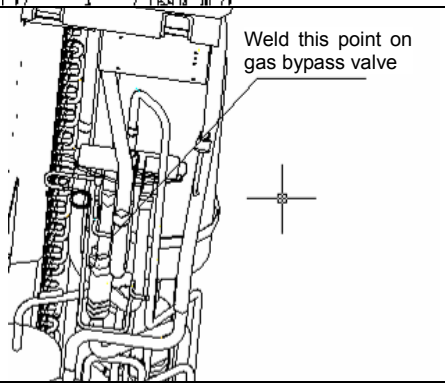	●Weld the joint between 4-way valve sub-assembly and liquid bypass sub-assembly. Note: During welding, take care not to let the flame burn other elements.

Removal and Installation of electronic expansion valve		
Step	Illustration	Handling Instruction
1. Disconnect the electronic expansion valve from connection pipe	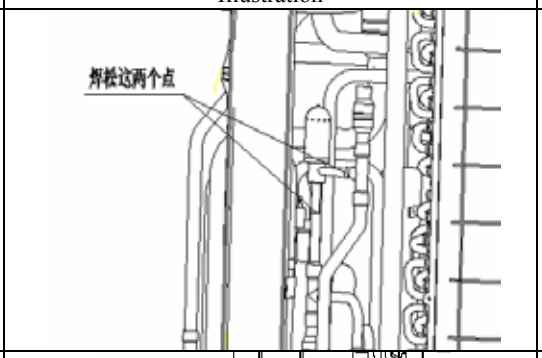	● Remove the coil of electronic expansion valve; ● Loosen the connection pipe of electronic expansion valve by welding; then pull out the connection pipe. Note: During welding, take care not to let the flame burn other elements.
2. Remove and replace the electronic expansion valve	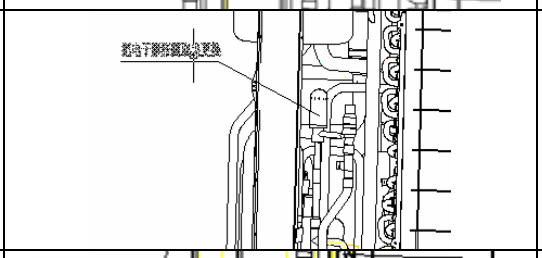	●Remove and replace the electronic expansion valve
3. Weld the electronic expansion valve to connection pipe	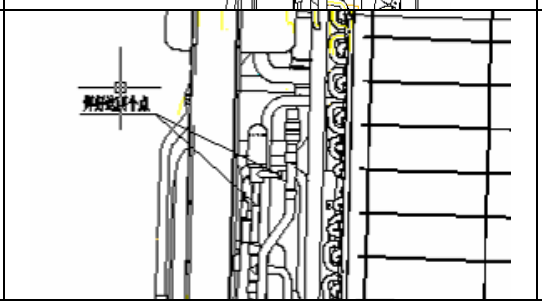	●Weld the connection pipe of electronic expansion valve. Note: During welding, take care not to let the flame burn other elements.

Removal and Installation of Oil Separator		
Step	Illustration	Handling Instruction
1. Disconnect the oil separator from the connection pipe	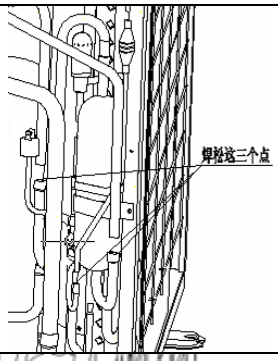	●Loosen the three joints on oil separator sub-assembly by welding; then, pull out the connection pipe. Note: During welding, take care not to let the flame burn other elements.
2 Loosen the screws fixing the oil separator	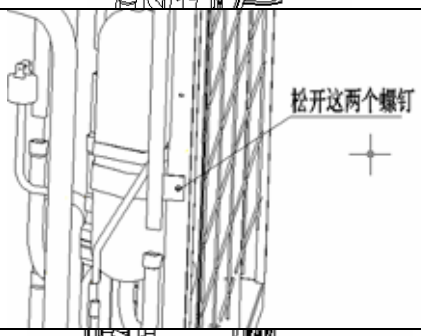	●Use screwdriver to loosen the screws fixing the oil separator.
3. Remove the oil separator and replace it	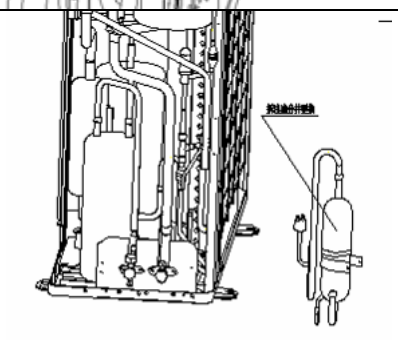	●Remove the oil separator and replace it
4. Tighten the screws fixing the oil separator	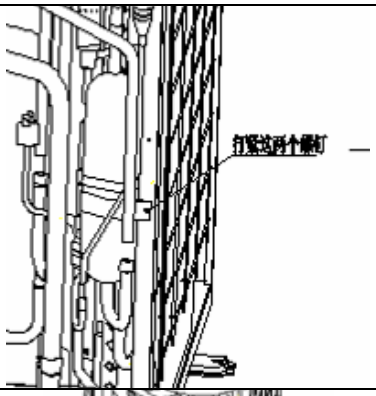	●Use screwdriver to tighten the screws fixing the oil separator.
5. Weld the oil separator to the connection pipe	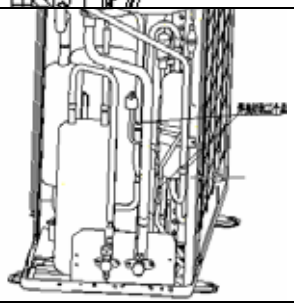	●Weld the three joints on oil separator sub-assembly. Note: During welding, take care not to let the flame burn other elements.

Removal and Installation of Gas-Liquid Separator		
Step	Illustration	Handling Instruction
1. Removal and Installation of Gas-Liquid Separator	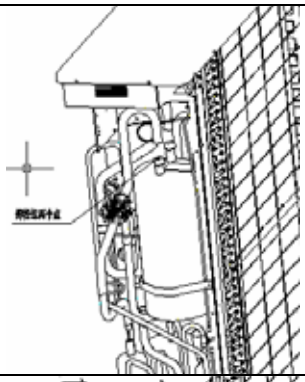	● Loosen the two joints on gas-liquid separator by welding; then, pull out the connection pipe. Note: During welding, take care not to let the flame burn other elements.
2. Loosen the screws fixing the gas-liquid separator	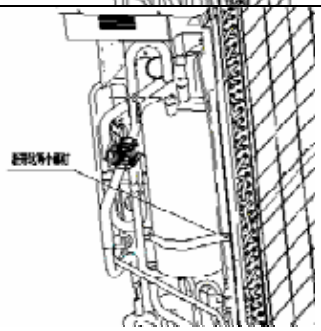	●Use screwdriver to loosen the screws fixing the gas-liquid separator.
3. Remove the gas-liquid separator and replace it	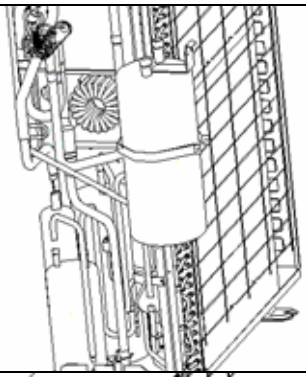	● Remove the gas-liquid separator and replace it
4. Tighten the screws fixing the gas-liquid separator	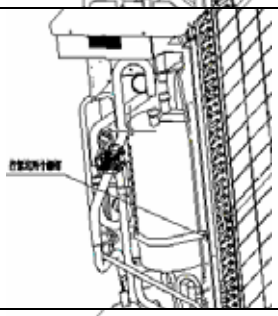	●Use screwdriver to tighten the screws fixing the gas-liquid separator.
5. Weld the gas-liquid separator to the connection pipe	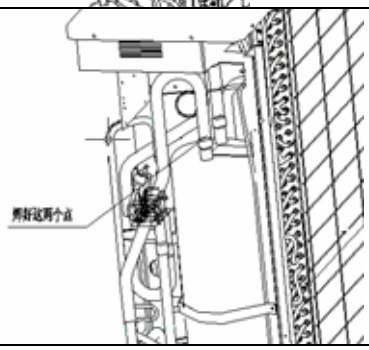	● Weld the two joints on gas-liquid separator; then, connect the pipe properly. Note: During welding, take care not to let the flame burn other elements.

Removal and Installation of Liquid Tank		
Step	Illustration	Handling Instruction
1. Disconnect the liquid tank from connection pip	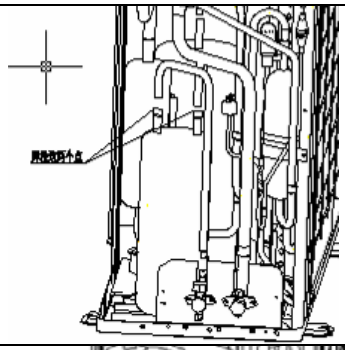	● Disconnect the liquid tank from connection pip Note: During welding, take care not to let the flame burn other elements.
2. Loosen the bolts fixing the liquid tank	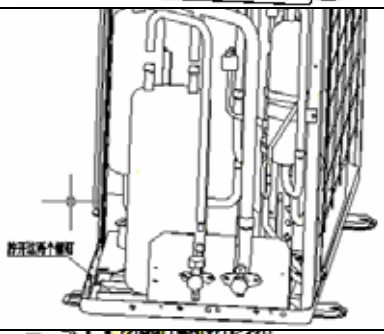	●Use spanner to loosen the bolts fixing the liquid tank.
3. Remove the liquid tank and replace it.	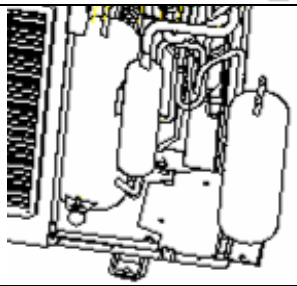	●Remove the liquid tank and replace it.
4 Tighten the bolts fixing the liquid tank	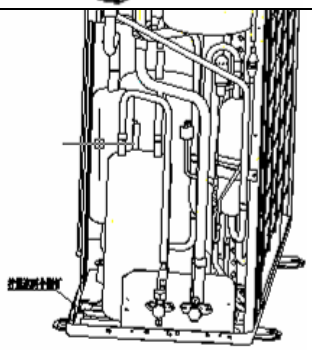	●Use spanner to tighten the bolts fixing the liquid tank.
5. Weld the liquid tank to connection pipe	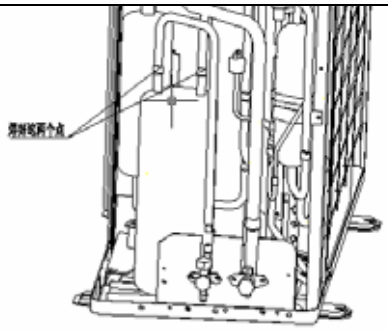	●Weld the two joints on liquid tank; then, connect the pipe properly. Weld the two joints on liquid tank; then, connect the pipe properly.

4.2 Removal and Assembly of Indoor Unit

- Cassette-type Unit

Removal and Assembly of Fan Motor		
Step	Illustration	Handling Instruction
1. Loosen the screws fixing the water tray	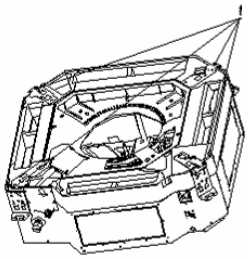	●Use screwdriver to loosen the screws fixing the water tray
2. Remove the water tray	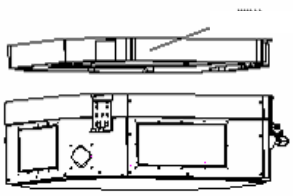	●Remove the water tray
3. Loosen the bolts fixing the fan	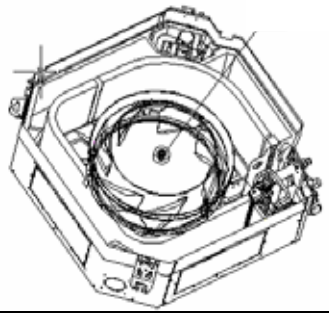	●Use spanner to loosen the bolts fixing the fan.
4. Remove the fan	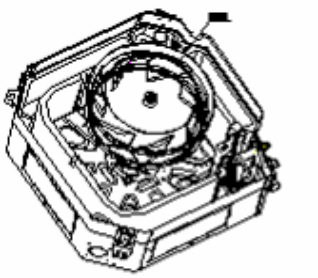	● Remove the fan
5. Loosen the screws fixing the motor	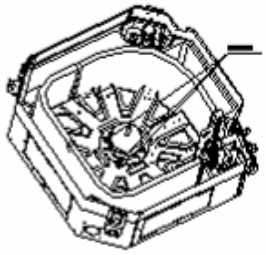	●Use screwdriver to loosen the screws fixing the motor

6. Remove the motor and replace it	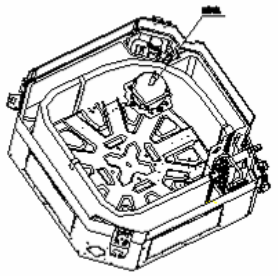	● Remove the motor and replace it
7. Tighten the screws fixing the motor	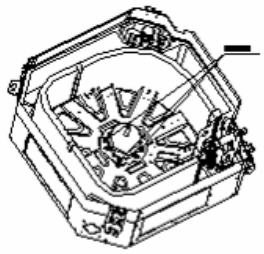	●Use screwdriver to tighten the screws fixing the motor.
8. Mount the fan and tighten the fixing bolts	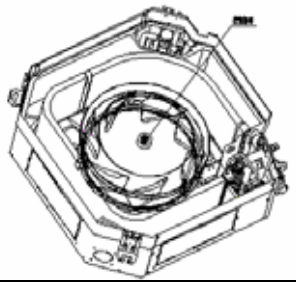	● Mount the fan and use spanner to tighten the bolts fixing the fan.
9. Mount the water tray and tighten the screws	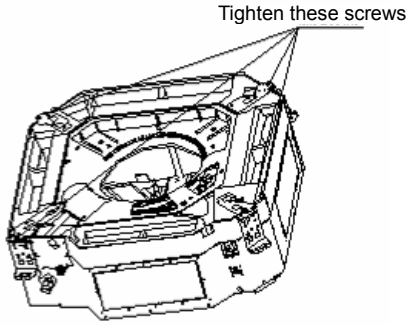	●Use screwdriver to loosen the screws fixing the water tray

Removal and Installation of Drainage Pump		
Step	Illustration	Handling Instruction
1. Loosen the screws fixing the water tray	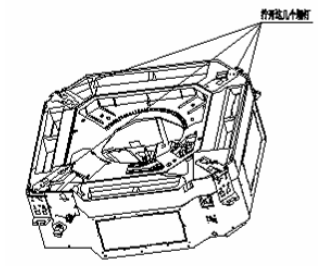	● Use screwdriver to loosen the screws fixing the water tray
2. Remove the water tray	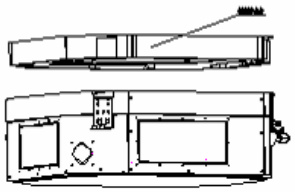	● Remove the water pump and replace it.
3. Pull out the water outlet pipe and loosen the screws fixing the water pump.	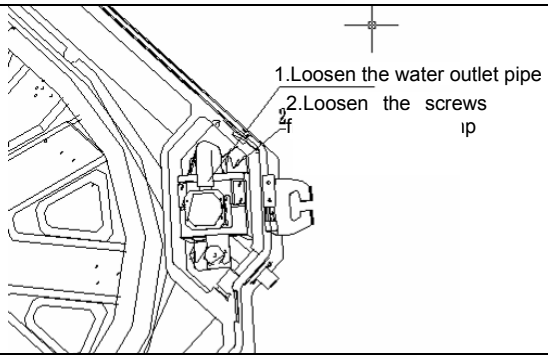	●Pull out the water outlet pipe and use screwdriver to loosen the screws fixing the water pump
4 Remove the water pump and replace it.	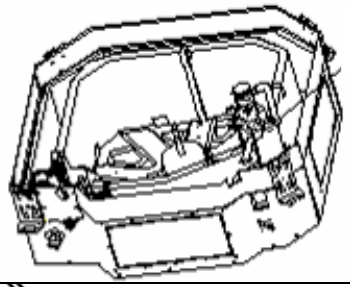	● Remove the water pump and replace it.
5. Connect the drainage hose and tighten the screws fixing the water pump.	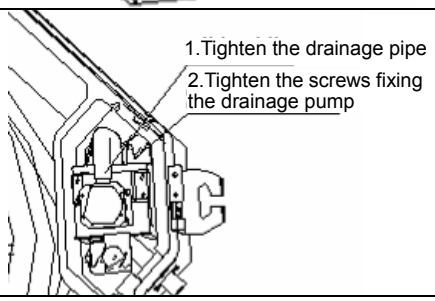	●Connect the drainage hose and use screwdriver to tighten the screws fixing the water pump.
6. Mount the water tray and tighten the screws	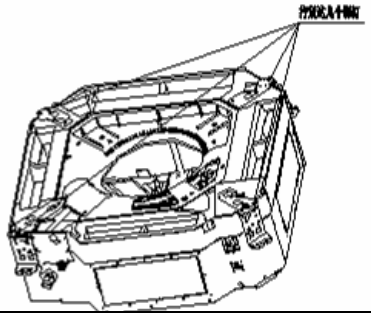	● Use screwdriver to tighten the screws fixing the water tray

- 1-way Cassette-type Unit

Removal and Assembly of Fan Motor		
Step	Illustration	Handling Instruction
1. Remove the front panel	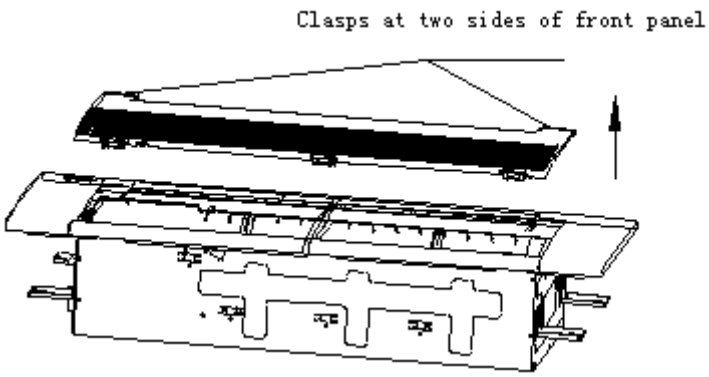	●Press switch on both side of the panle. Open one side of the panel and remove the three opposite buckles. Remove the front panel.
2. Remove the screw of front panel	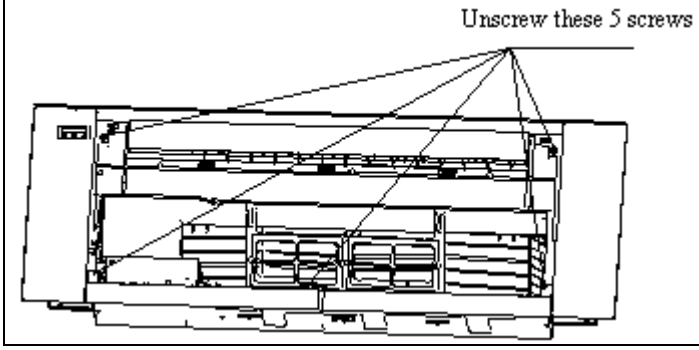	●Loosen the screw with screwdriver
3. Remove the panel.	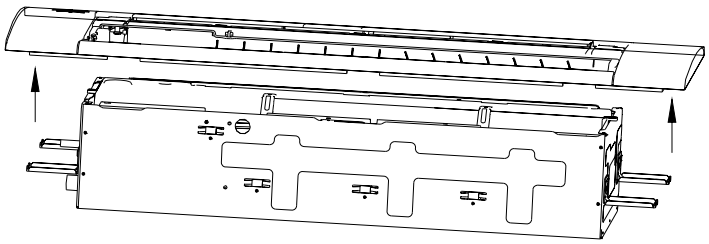	●Remove the panel.
4. Loosen the screws fixing the water tray	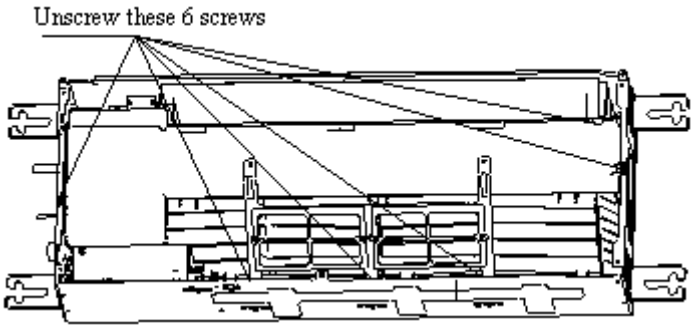	●Use screwdriver to loosen the screws fixing the water tray
5. Remove the water tray and filter support	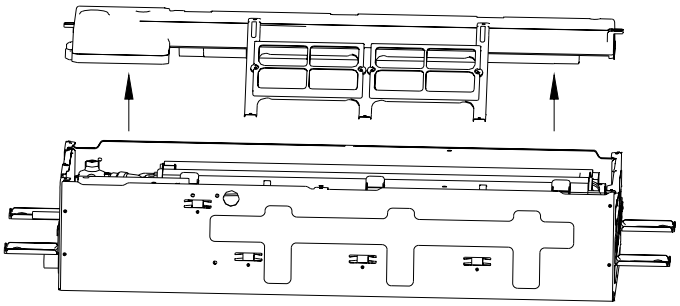	●Remove the water tray and filter support

6. Loosen the fixing screw of motor cover	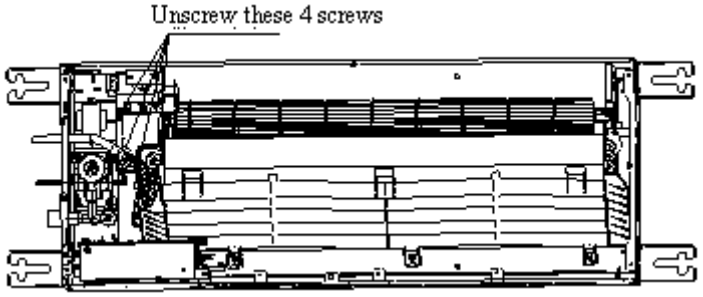	●Loosen the fixing screw of motor cover with screwdriver
7. Remove motor cover subassembly	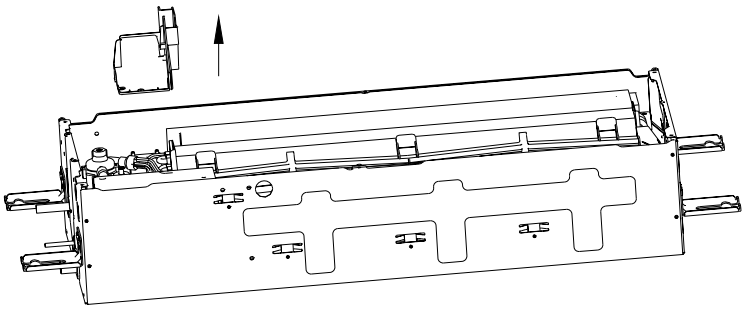	●Remove motor cover subassembly
8. Loosen the screw fixing motor and motor shaft	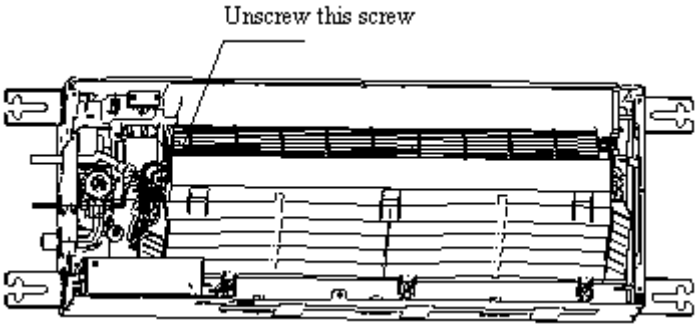	Rotate the cross flow blade to make the screw upward. Loosen the screw with screwdriver.
9. Replace the motor	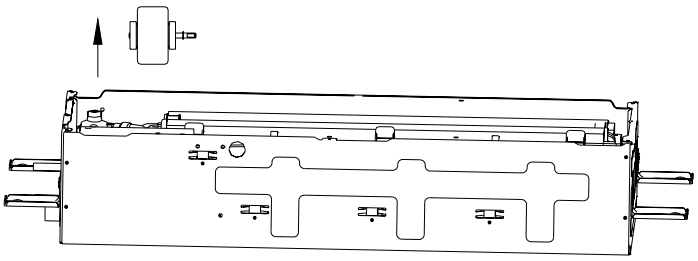	●Remove the motor and mount a new one
10. Mount the motor cover subassembly and tighten the screw	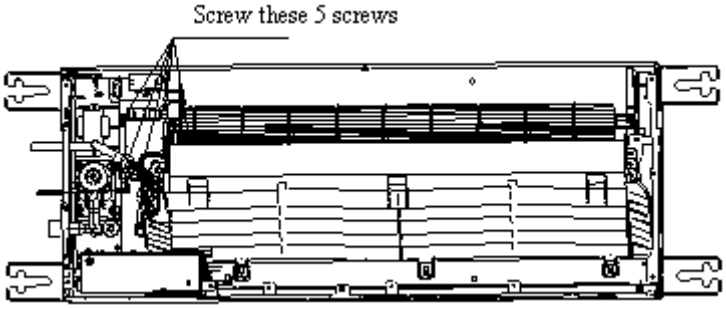	●Mount the motor cover subassembly and tighten the fixing screw of motor cover and cross flow blade.

11 Mount water tray and filter support. Fix the screw.	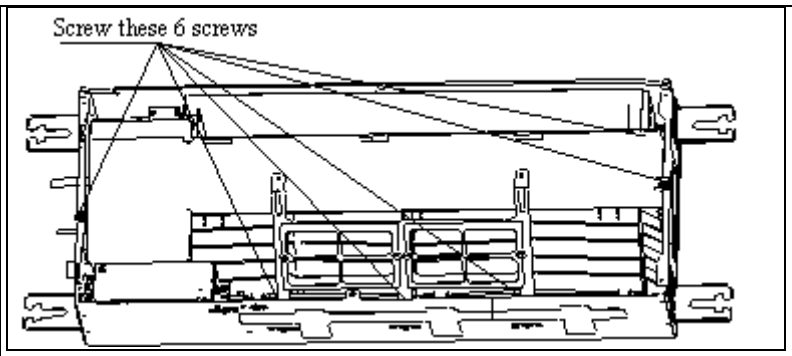	●Mount water tray and filter support. tighten the screw fixing water tray and filter support.
12. Mount panel subassembly and tighten the screw.	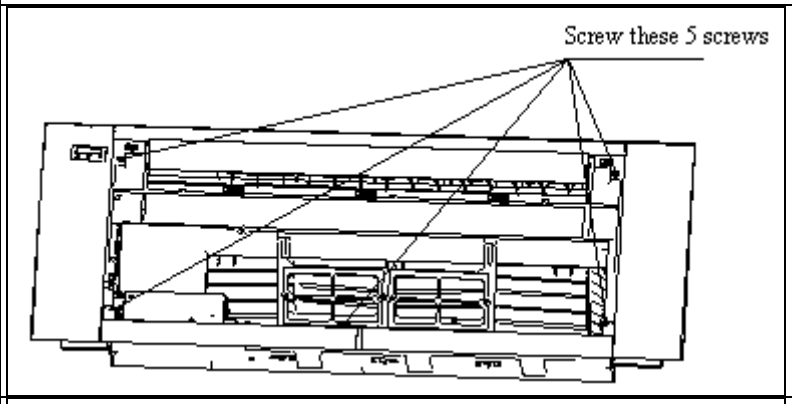	●Mount panel subassembly and tighten the screw.
13. Mount panel subassembly	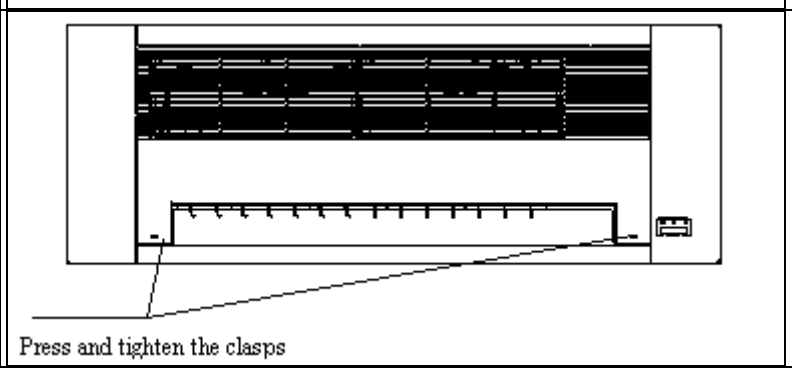	●Mount panel subassembly and press the switch on both side of the panel.

Removal and Assembly of Water Pump		
Step	Illustration	Handling Instruction
1. Remove the panel subassembly	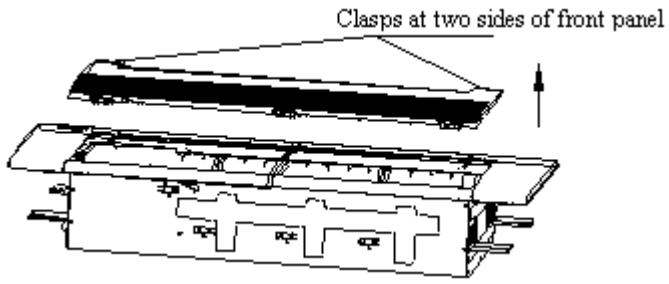	●Press switch on both side of the panle. Open one side of the panel and remove the three opposite buckles. Remove the front panel.
2. Loosen the screw fixing panel subassembly and main body	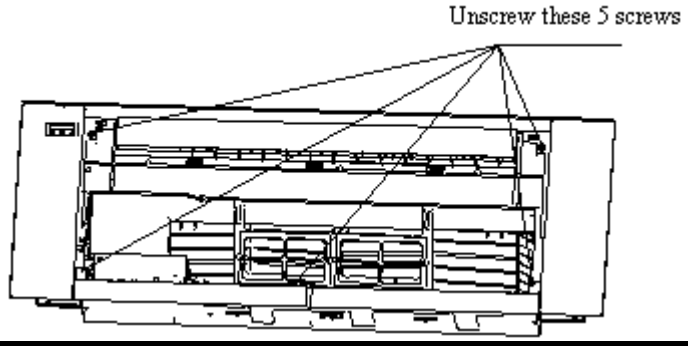	●Loosen the screw fixing panel subassembly and main body with screwdriver
3. Take out the panel subassembly	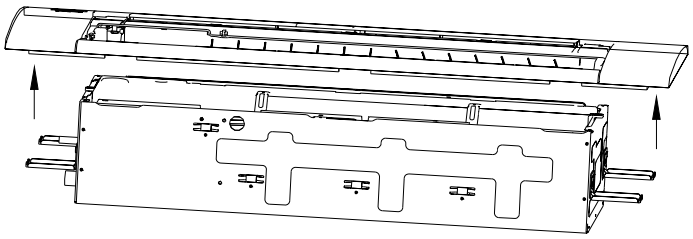	●Take out the panel subassembly
4. Loosen the screw of water tray	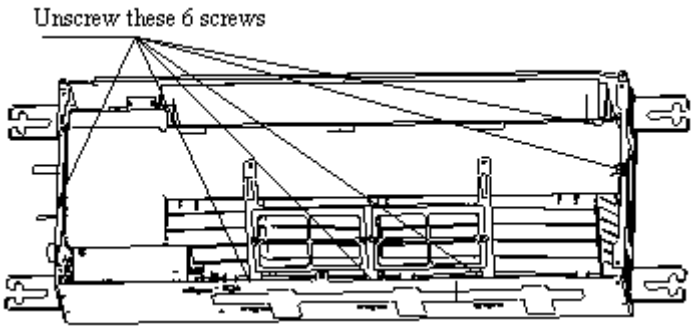	●Loosen the screw of water tray with screwdriver
5. Remove the water tray and filtering screen support	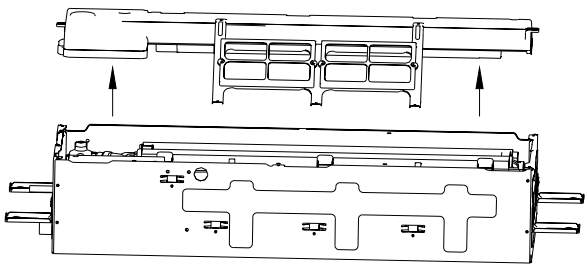	●Remove the water tray and filtering screen support

6. Loosen the fixing screw of water pump	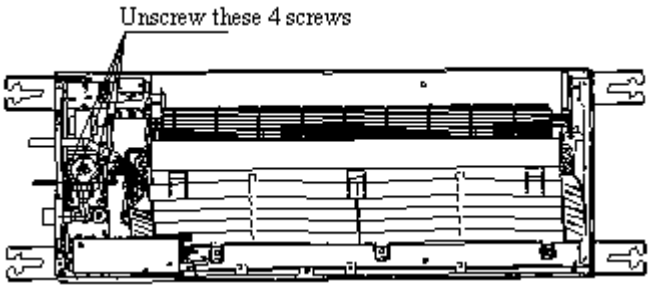	●Loosen the fixing screw of water pump with screwdriver. Pull off the drain pipe from the water pump.
7. Replace the water pump	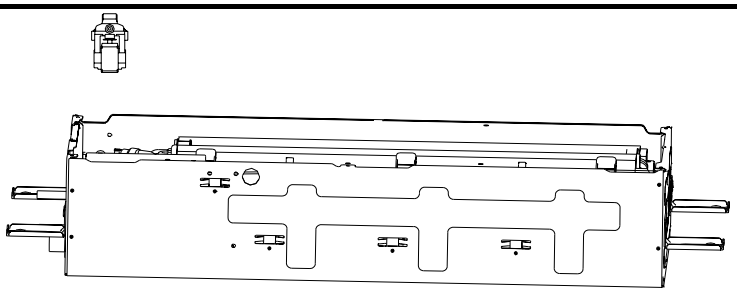	●Remove the water pump and mount a new one.
8. Connect the water pump and drain pipe. Tighten the fixing screws.	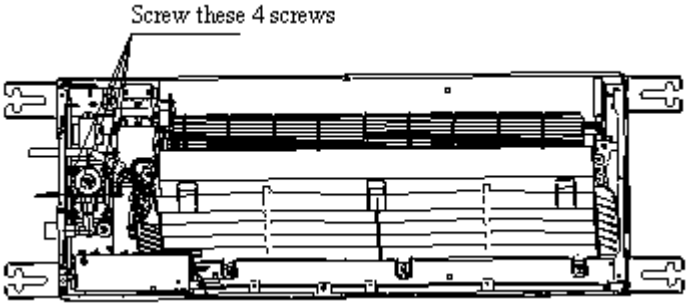	●Connect the water pump and drain pipe. Tighten the fixing screws.
11. Mount the water tray and filtering screen support and tighten the screw	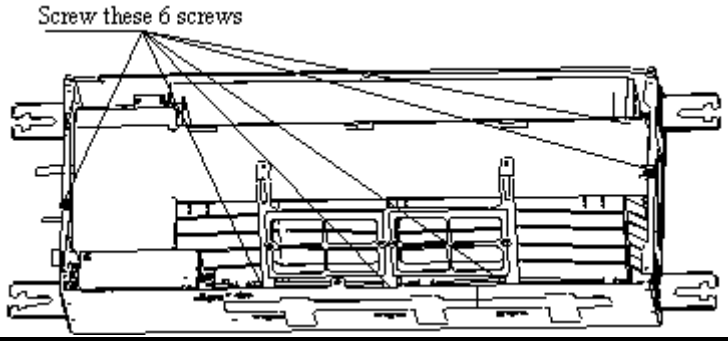	●Mount the water tray and filtering screen support and tighten the screw.
12. Mount panel subassembly and tighten the screw.	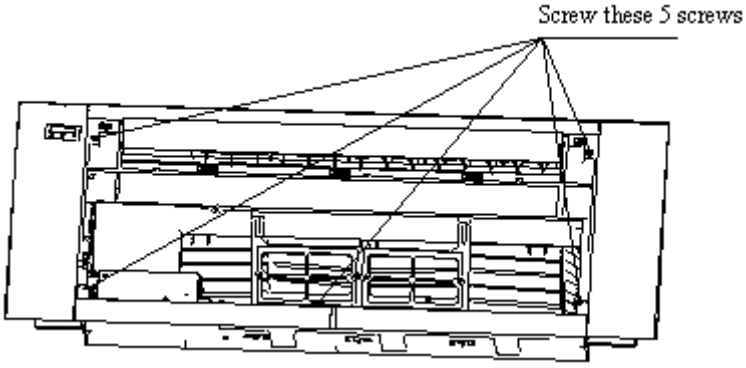	●Mount panel subassembly and tighten the screw.

13. Mount panel subassembly	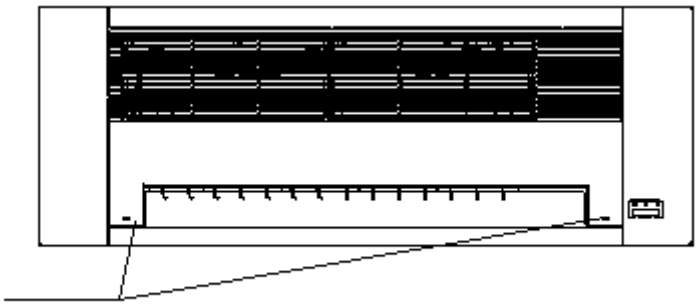	●Mount panel subassembly and press the switch on both side of the panel.。

- Ultra-thin Duct-Type Unit

Removal and Assembly of Fan Motor		
Remarks: Before removing the fan, make sure to cut off the power firstly.		
Step	Illustration	Handling Instruction
1. Unplug the motor cables	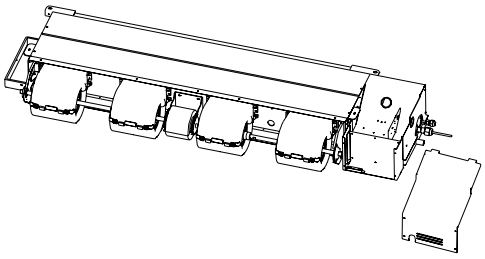	●Cut off the power supply of indoor unit. Use screwdriver to remove the electric box cover and unplug the motor cables in electric box.
2. Remove the back propeller housing	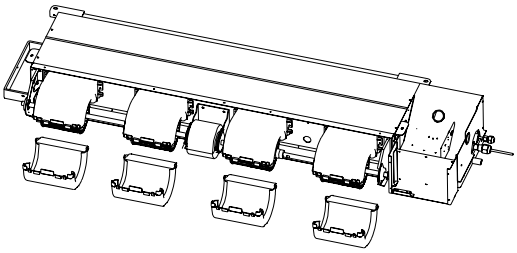	●Loosen the clamp between back propeller housing and front propeller housing. Remove the back propeller housing
3. Remove the front propeller housing	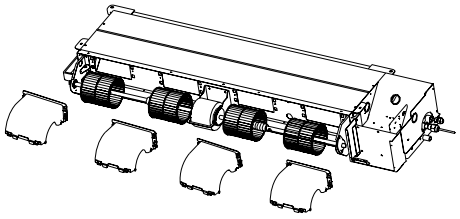	●Use screwdriver to loosen the screws fixing the front propeller housing. Remove the front propeller housing.
4. Loosen the fan and motor.	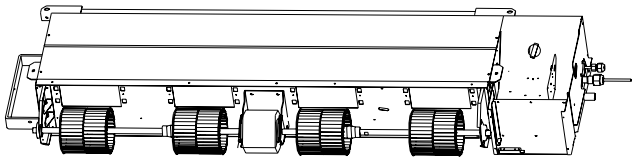	●Use inner hexagonal spanner to loosen the screws on fan and remove the clamp fixing the motor.
5. Remove the motor	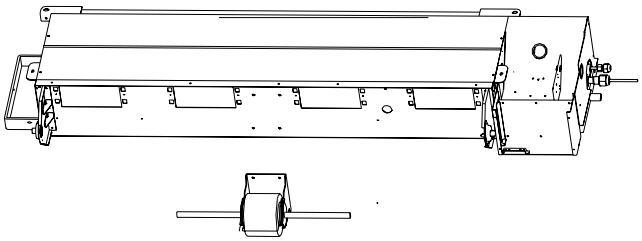	●Firstly, disengage the motor from motor support and then disengage the fan from the motor. Then, remove the motor from the lower return air inlet frame. In which, for the motor with automatic motor support, the motor support shall be removed in advance and then changed to the unit.
6. Replace with a new motor	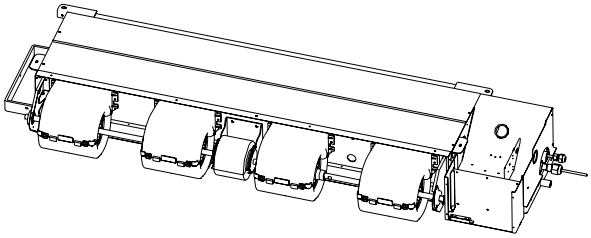	●Assemble the unit in reverse to the disassembly procedures and energize it for testing.

- Duct-Type Unit

Removal and Assembly of Fan Motor		
Remarks: Before removing the fan, make sure to cut off the power firstly.		
Step	Illustration	Handling Instruction
1. Unplug the motor cables	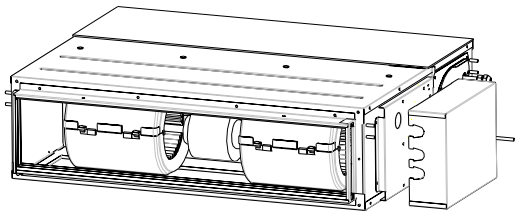	●Cut off the power supply of indoor unit. Use screwdriver to remove the electric box cover and unplug the motor cables in electric box.
2. Remove the cover of return air inlet	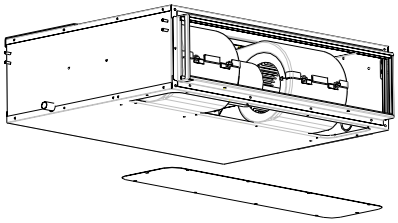	●Use screwdriver to remove the lower return air inlet cover board.
3. Remove the back propeller housing	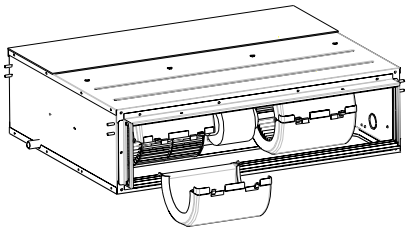	●Loosen the clamp between back propeller housing and front propeller housing. Remove the back propeller housing.
4. Remove the front propeller housing	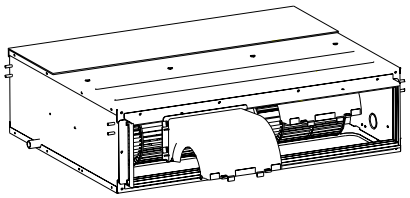	●Use screwdriver to loosen the screws fixing the front propeller housing. Remove the front propeller housing.
5. Loosen the fan and motor.	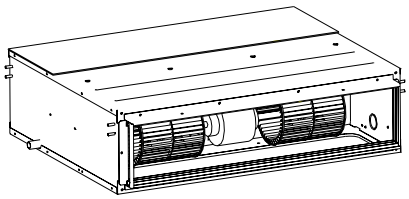	●Use inner hexagonal spanner to loosen the screws on fan and remove the clamp fixing the motor.
6. Remove the motor	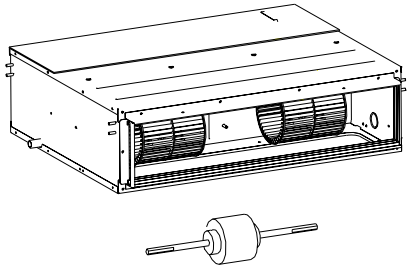	●Firstly, disengage the motor from motor support and then disengage the fan from the motor. Then, remove the motor from the lower return air inlet frame. In which, for the motor with automatic motor support, the motor support shall be removed in advance and then changed to the unit.

7. Replace with a new motor	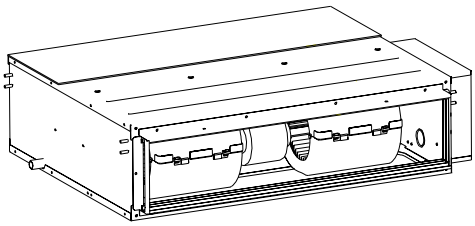	●Assemble the unit in reverse to the disassembly procedures and energize it for testing.

- Duct-Type Unit（5.6 kW～8.0 kW）

Removal and Assembly of Fan Motor		
Remarks: Before removing the fan, make sure to cut off the power firstly.		
Step	Illustration	Handling Instruction
1. Unplug the motor cables	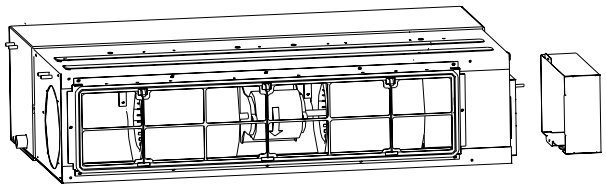	●Cut off the power supply of indoor unit. Use screwdriver to remove the electric box cover and unplug the motor cables in electric box.
2. Remove the filter sub-assembly and return air inlet cover board	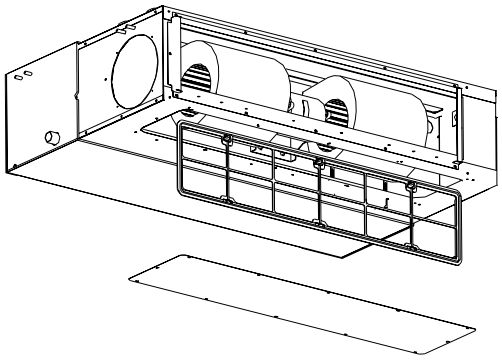	●Remove the filter sub-assembly from the return air inlet frame and use screwdriver to remove the return air inlet cover board.。
3. Remove the screws on fan sub-assembly.	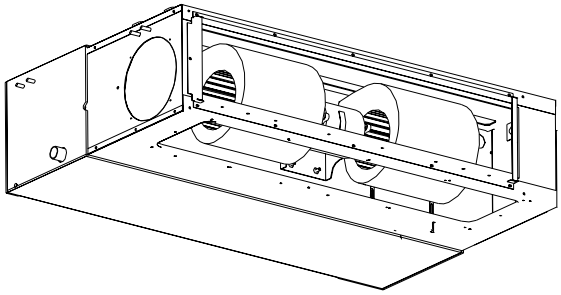	●Remove the screws on fan sub-assembly.
4. Overturn the propeller housing	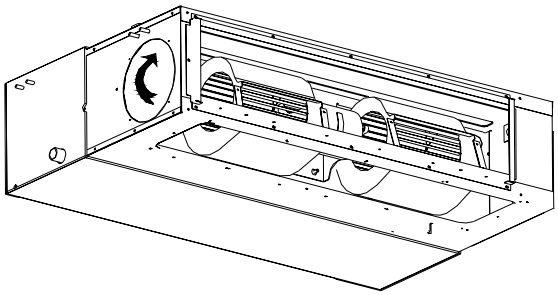	●Rotate the propeller housing to the return air inlet opening according to arrow direction.
5. Loosen the fan and motor.	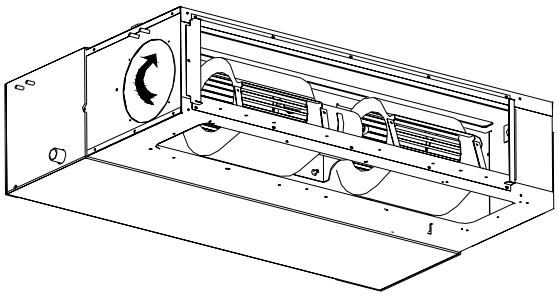	●Use inner hexagonal spanner to loosen the screws on fan and remove the clamp fixing the motor.

6. Replace the motor	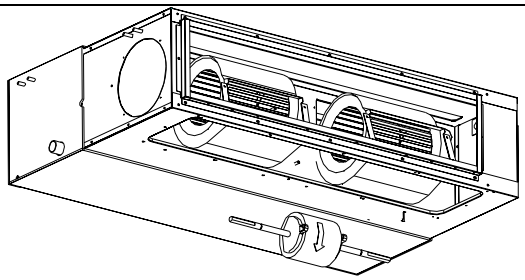	●Firstly, disengage the motor from motor support. Then, sequentially disengage the fan sub-assembly form the motor shaft. Remove the motor from the return air inlet and replace with new motor. In which, for the motor with automatic motor support, the motor support shall be removed in advance and then changed to the unit.
7. Assemble the unit in reverse to the disassembly procedures	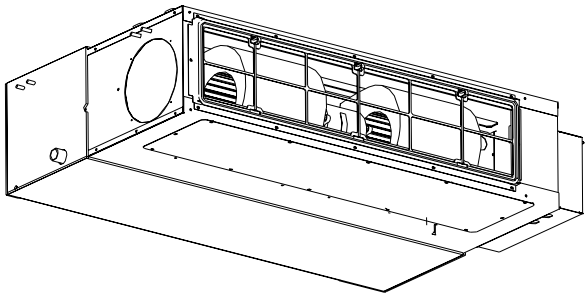	●Assemble the unit in reverse to the disassembly procedures and energize it for testing.

- Duct-Type Unit（9.0 kW～14 kW）

Removal and Assembly of Fan Motor		
Remarks: Before removing the fan, make sure to cut off the power firstly.		
Step	Illustration	Handling Instruction
1. Unplug the motor cables	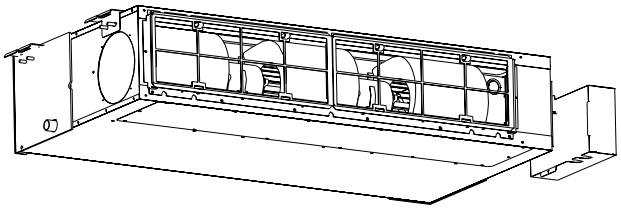	●Cut off the power supply of indoor unit. Use screwdriver to remove the electric box cover and unplug the motor cables in electric box.
2. Remove the filter sub-assembly and return air inlet cover board	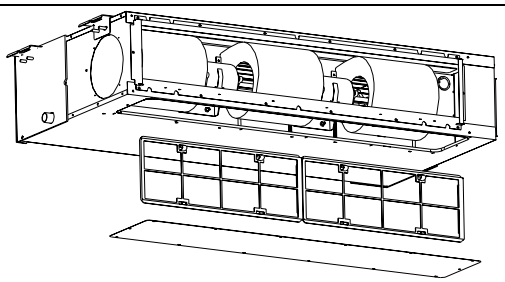	●Remove the filter sub-assembly from the return air inlet frame and use screwdriver to remove the return air inlet cover board.。
3. Remove the screws on fan sub-assembly.	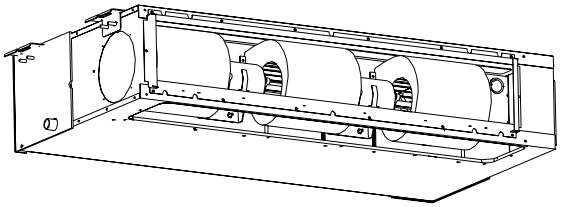	●Remove the screws on fan sub-assembly.
4. Overturn the propeller housing	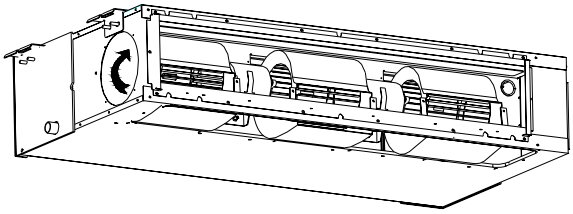	●Rotate the propeller housing to the return air inlet opening according to arrow direction.
5. Loosen the fan and motor.	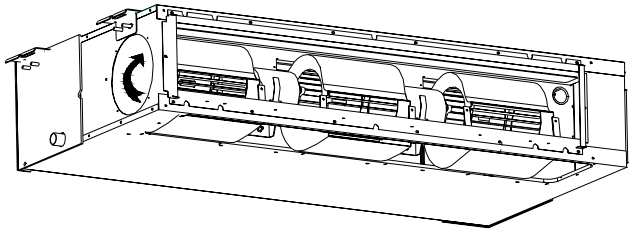	●Use inner hexagonal spanner to loosen the screws on fan and remove the clamp fixing the motor.
6. Replace the motor	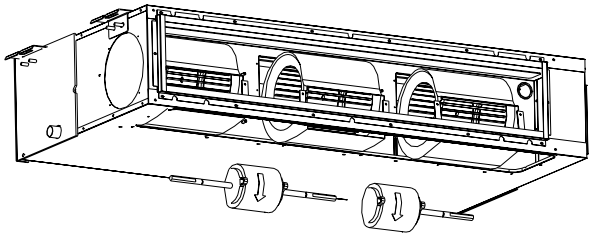	●Firstly, disengage the motor from motor support. Then, sequentially disengage the fan sub-assembly form the motor shaft. Remove the motor from the return air inlet and replace with new motor. In which, for the motor with automatic motor support, the motor support shall be removed in advance and then changed to the unit.

7. Assemble the unit in reverse to the disassembly procedures	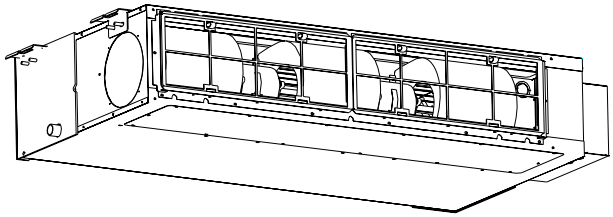	●Assemble the unit in reverse to the disassembly procedures and energize it for testing.

- Wall-mounted Unit

Removal and Wall-mounted Unit Assembly of Fan Motor		
Remarks: Before removing the compressor, make sure that there is no refrigerant inside the pipe system and that the power has been cut off.		
Step	Illustration	Handling Instruction
1. Firstly, remove the front panel, front case and electric box	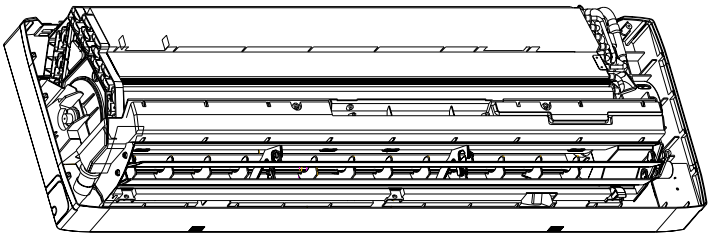	●Firstly, use screwdriver to loosen the screws. ●Unplug the motor terminals in the electric box. Loosen the earth screws and lift up.
2. Remove the evaporator	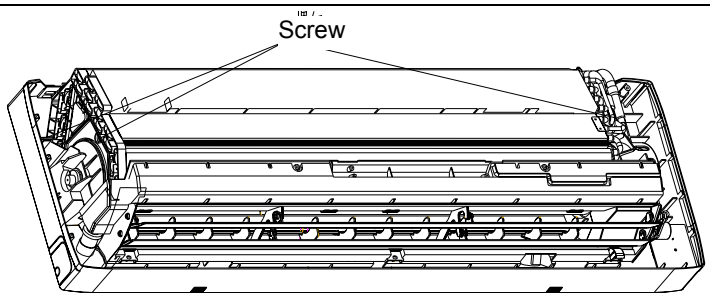	●Firstly, use screwdriver to remove the fixing screws on the left and right side. Then, remove the evaporator.
3. Remove the motor and cross flow fan	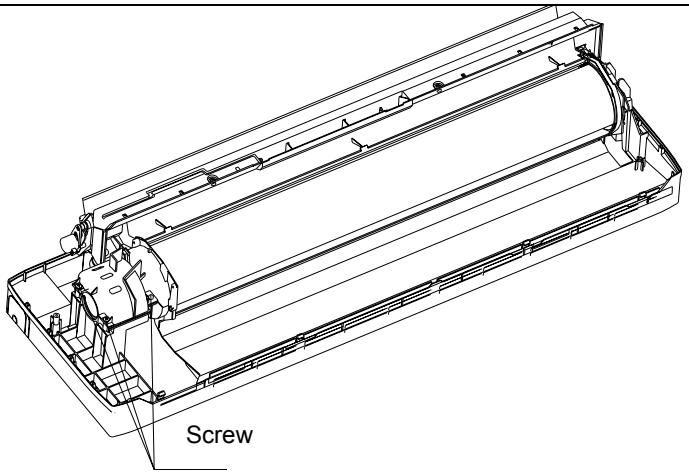	●Use screwdriver to remove the screws fixing the motor clamp and remove the screws connecting the motor and cross flow fan. Then, the motor can be separated from the cross flow fan.

2.9 PFC protection

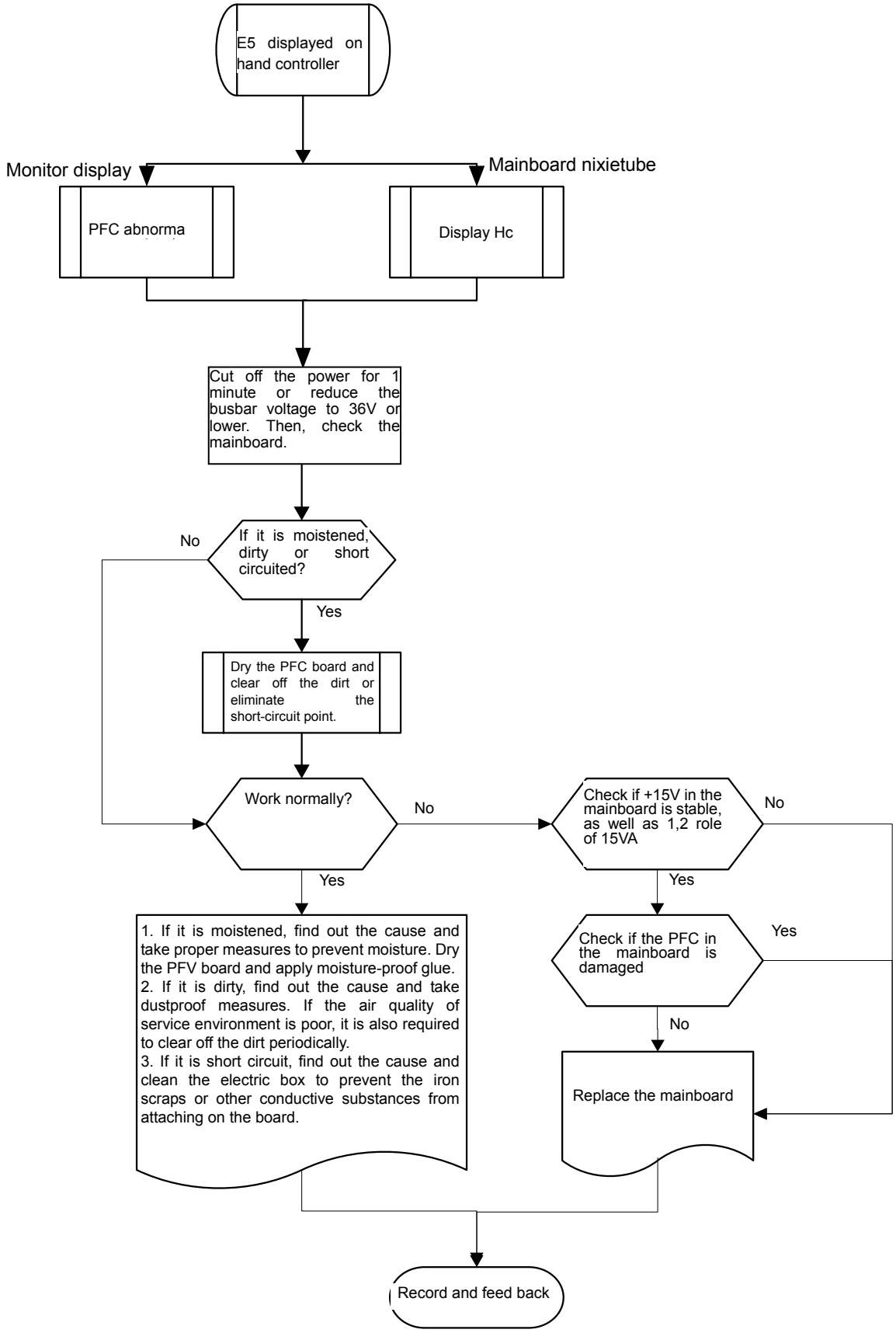

2.10 IPM protection

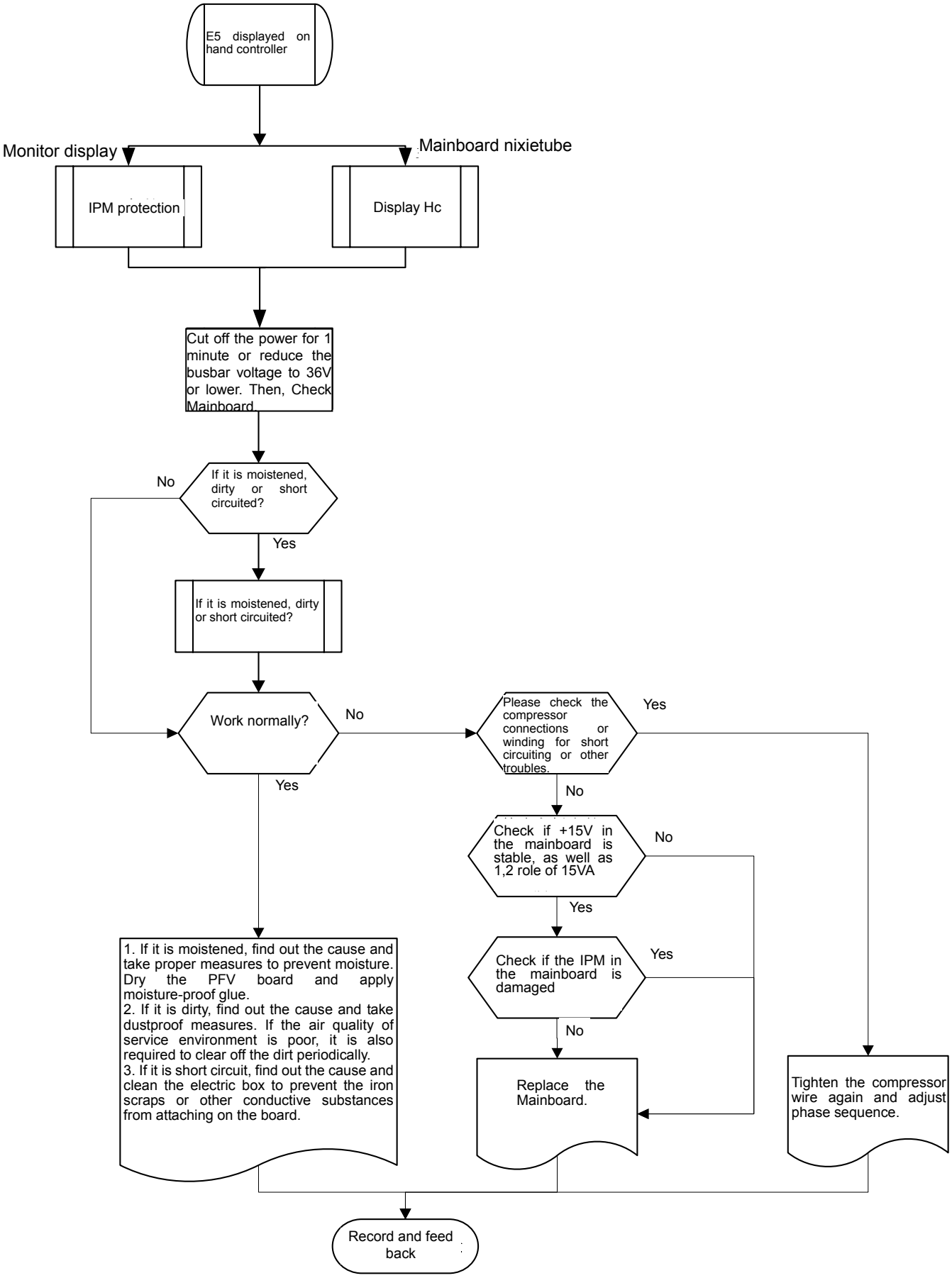

2.11 Tripping

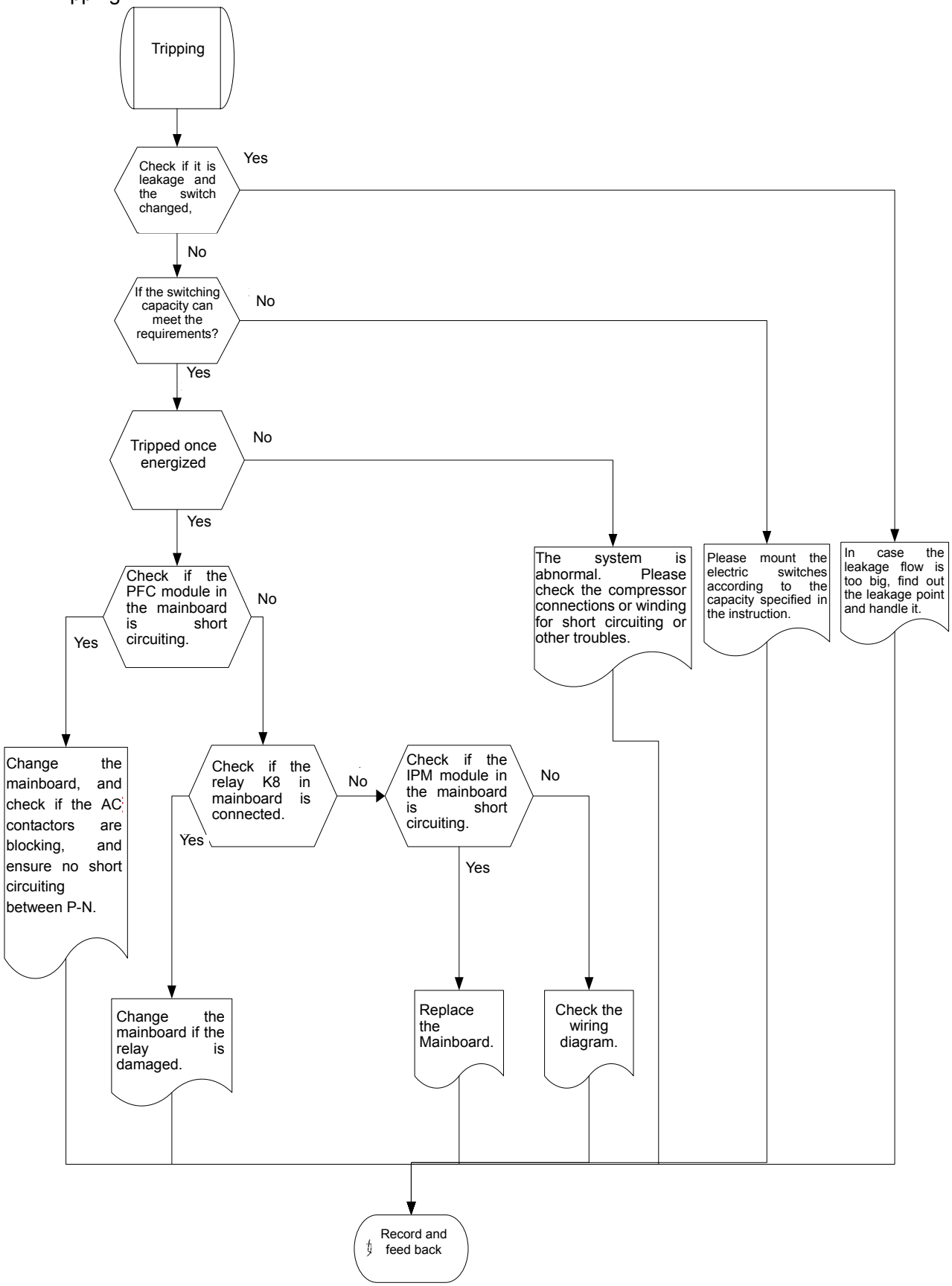

2.12 Radiator overheat protection

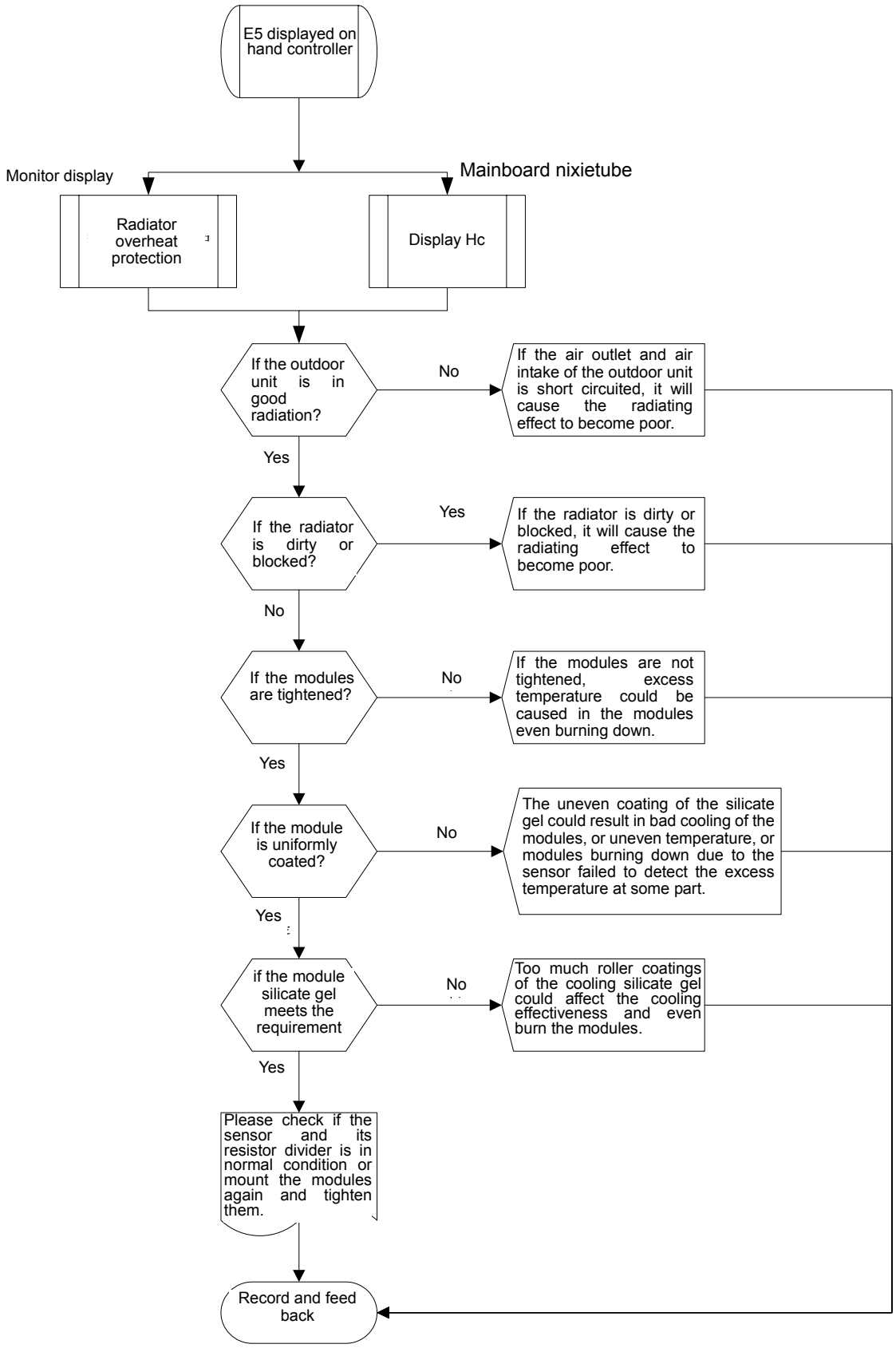

2.13 Overvoltage protection of DC voltage

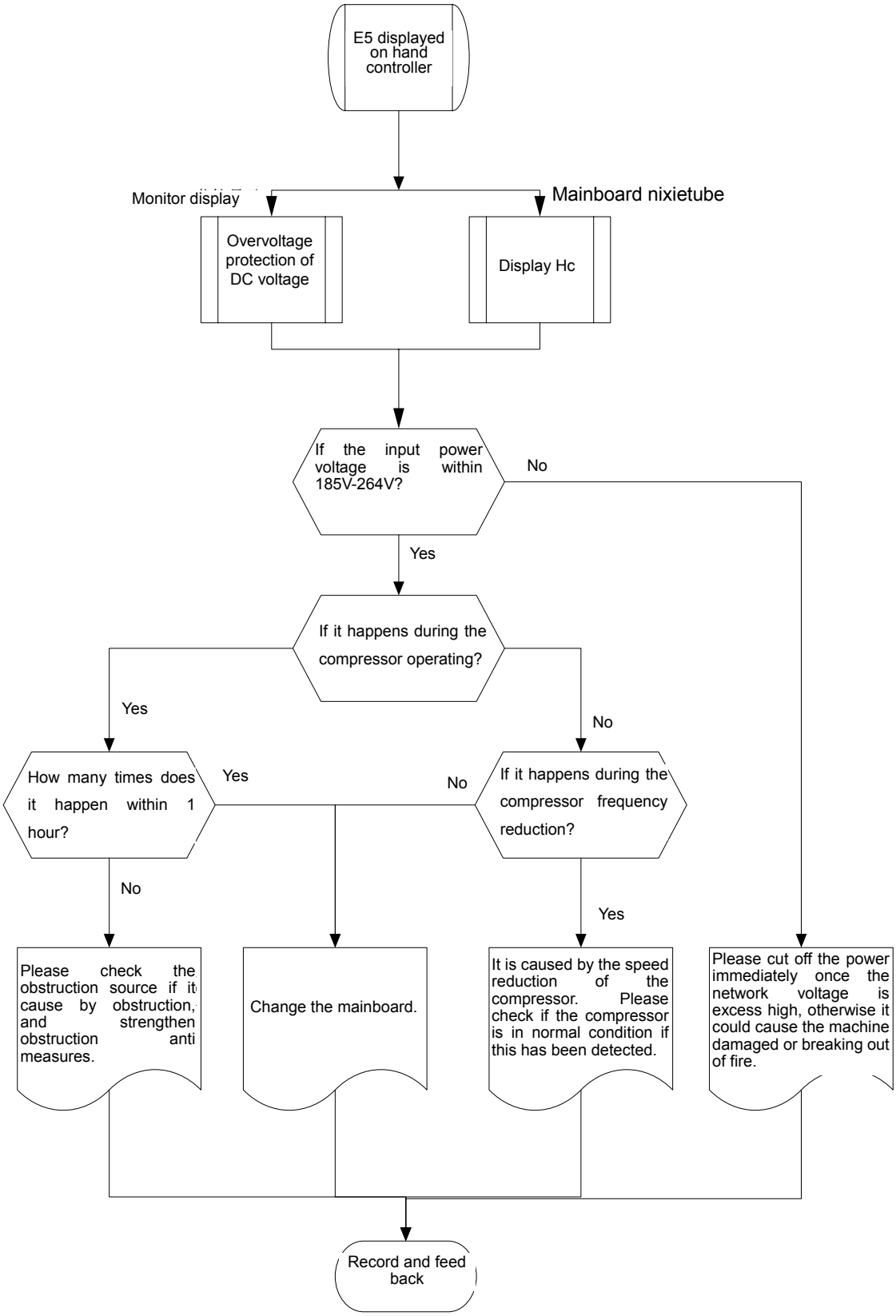

3 Power Distribution

3.1 Principle of Power Distribution

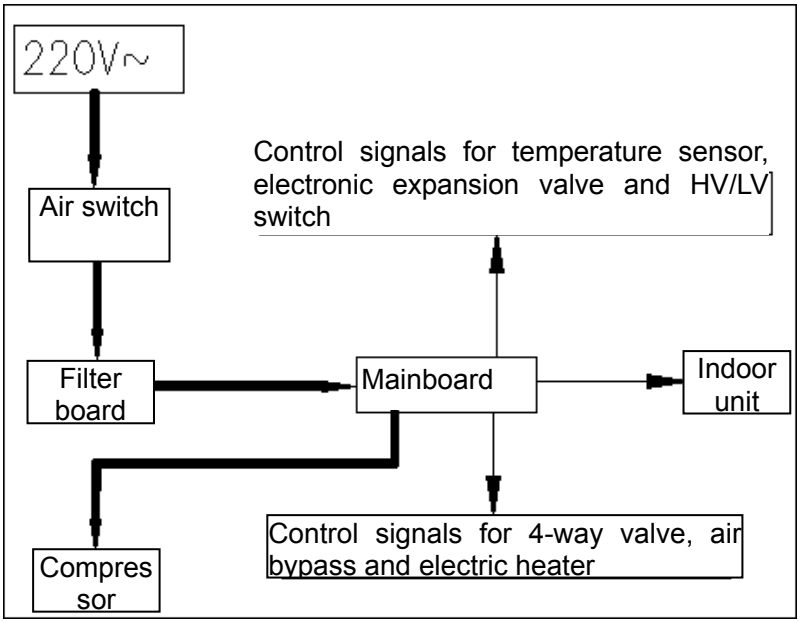

(The coarse line refer to control line and the fine line refers to control line)

5 EXPLODED VIEWS AND PART LIST

5.1 Exploded Views and Parts List of Outdoor Unit

1) GMV(L)-Pd100W/NaB-K,GMV(L)-Pd120W/NaB-K,GMV(L)-Pd140W/NaB-K,GMV(L)-Pd160W/NaB-K

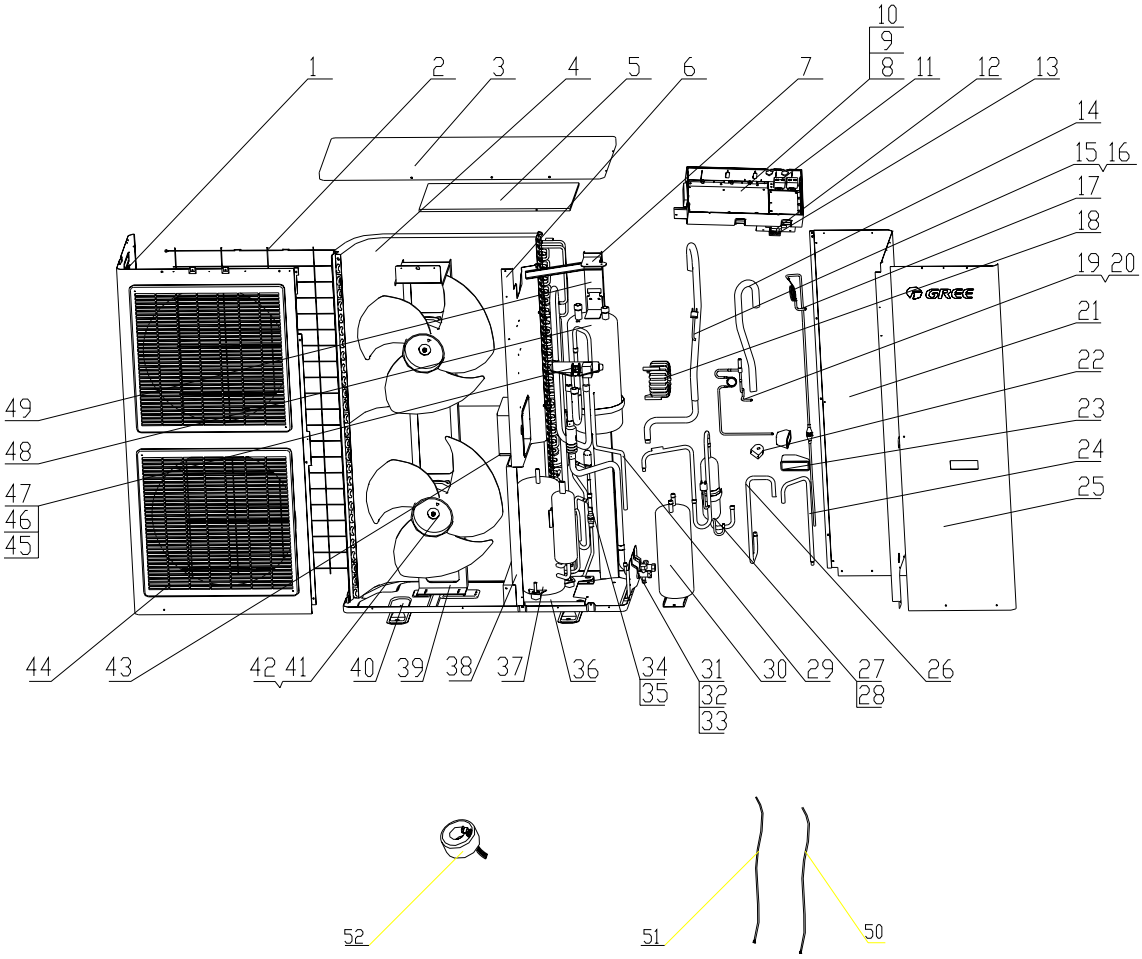

No.	Part Name	Code	Qty.
1	Front Plate	01435436	1
2	Rear Grill	01475432	1
3	Top Cover	01255262	1
4	Condenser Assy	01124159①	1
		01124158②	
5	Electric Box Cover	01424235	1
6	Clapboard	01244132	1
7	Retaining Plate	01844135	1
8	Electric Box Assy	01394528③	1
		01394799④	
		01394802⑤	
		01394797⑥	
9	Main Board	30226217	1
10	Filter Board	30228115	1
11	capacitance	33010037	2
12	Bipolar Air Switch	46020018	1
13	Terminal Board	42011242	1
14	Connection Pipe	05024915	1
No.	Part Name	Code	Qty.
15	Inhalation Tube Sub-Assy	04674170	1
16	LOW PRESSURE SWITCH	46020007	1
17	Capillary Sub-Assy	04104154	1
18	Capacitor	4312002101	1
19	Gas by-pass valve sub-assy	07334329	1
20	Electromagnetic Valve	43000054	1
21	Rear Side Plate Sub-Assy	01314212	1
22	Solenoid Coil	4304000403	1
23	Handle	26235253	2
24	Connection Pipe	05024911	1
25	Front Side Plate Sub-Assy	01305430	1
26	Connection Pipe	05024916	1
27	Discharge Tube Sub-Assy	04634226	1
28	Pressure Protect Switch	4602000902	1
29	Discharge Tube Sub-Assy	04634227	1
30	High-pressure Accumulator	07228739	1
31	Valve Support Sub-Assy	01715001	1
32	Cut-off Valve	07130209	1
33	Cut-off Valve	07103030⑦	1
		07130212⑧	
34	EXV sub-assy	07334161	1
35	Electric expand vavle	07334102	1
36	Retaining Plate Sub-Assy	01844134	1
37	Compressor	01844134P	1
38	Clapboard	00205224	1
39	Motor Support	01244112	1
40	Base Plate Sub-Assy	01804113	1
41	Axial Flow Fan φ472X165	01194133P	1
42	Fan Motor	15013302⑨	2

		15704113⑩	
43	Capacitor BOX	01424173	1
44	Panel Grille	22414102	2
45	4-wayValveSub-Assy	04144169	1
46	4-Way Valve	43000338	1
47	4-way Valve Fittings	4300040029	1
48	Gas-liquid Separator	07228767	1
49	Support	01804201	1
50	Wiring	40110142	1
51	Connection Wire	4003014301	1
52	Magnet Coil for Electronic Expansion Valve	4300010822	1

Note:

1. Condenser Assy ① is only applicable toGMV(L)-Pd100W/NaB-K,GMV(L)-Pd120W/NaB-K
2. Condenser Assy ② is only applicable to GMV(L)-Pd140W/NaB-K,GMV(L)-Pd160W/NaB-K
3. Electric Box Assy ③ is only applicable to GMV(L)-Pd100W/NaB-K
4. Electric Box Assy ④ is only applicable to GMV(L)-Pd120W/NaB-K
5. Electric Box Assy ④ is only applicable to GMV(L)-Pd140W/NaB-K
6. Electric Box Assy ④ is only applicable to GMV(L)-Pd160W/NaB-K
7. Cut-off Valve ⑦ is only applicable to GMV(L)-Pd100W/NaB-K,GMV(L)-Pd120W/NaB-K, GMV(L)-Pd140W/NaB-K
8. Cut-off Valve is ⑧ is only applicable to GMV(L)-Pd160W/NaB-K
9. Fan Motor is only applicable to GMV(L)-Pd100W/NaB-K,GMV(L)-Pd120W/NaB-K,GMV(L)-Pd140W/NaB-K
10. Fan Motor is only applicable to GMV(L)-Pd160W/NaB-K

5.2 Exploded Views and Parts List of Indoor Unit

5.2 .1 4-way Cassette Type Unit

（1） GMV(L)-R28T/Na-K, GMV(L)-R36T/Na-K, GMV(L)-R45T/Na-K, GMV(L)-R50T/Na-K, GMV(L)-R56T/Na-K, GMV(L)-R71T/Na-K, GMV(L)-R80T/Na-K

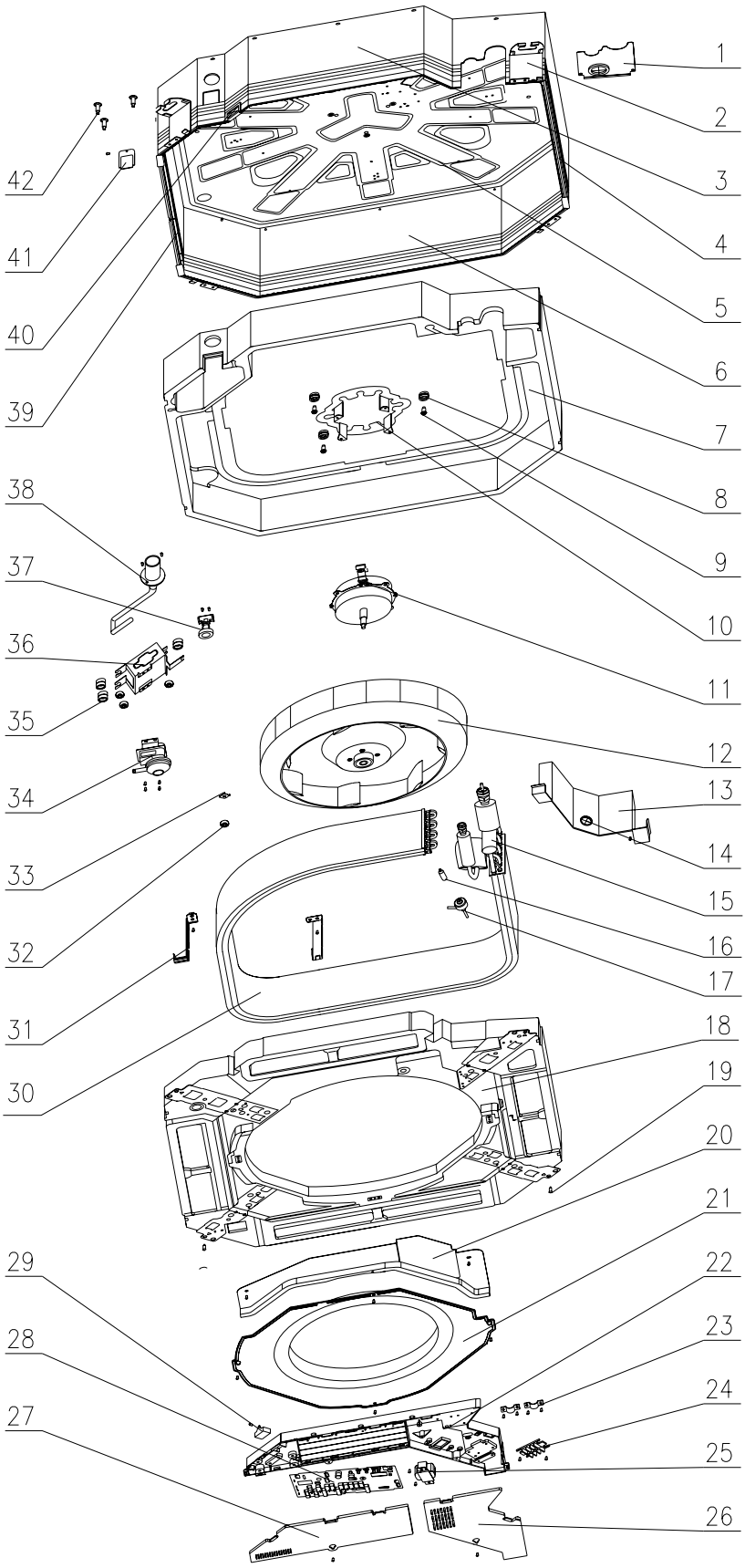

No.	Part Name	GMV-R28T/Na-K,GMV-R36T/Na-K		GMVL-R28T/Na-K,GMVL-R36T/Na-K	
		Code	Qty.	Code	Qty.
1	Tube Exit Plate	01382710	1	01382710	1
2	Body Fixed Plate	01332701	4	01332701	4
3	Front Side Plate	01302717	1	01302717	1
4	Left Side Plate	01302740	1	01302740	1
5	Base Plate	01222702	1	01222702	1
6	Rear Side Plate	01302719	1	01302719	1
7	Bottom Foam	52012716	1	52012716	1
8	Motor Gasket	76712711	3	76712711	3
9	Bolt	70212701	3	70212701	3
10	Motor Fixer	01702701	1	01702701	1
11	Fan Motor	15704901	1	15704901	1
12	Centrifugal Fan	10312721	1	10312721	1
13	Evaporator Connection	01072004	1	01072004	1
14	Cable-cross Loop	76513101	2	76513101	2
15	shunt	072287842	1	072287842	1
16	Water Tray	12412701	1	12412701	1
17	Screw	70140032	4	70140032	4
18	Electric Box Base Plate	01412721	1	01412721	1
19	Flow Guide Loop	10372701	1	10372701	1
20	Electric Box	20102701	1	20102701	1
21	Wire Clamp	71010102	4	71010102	4
22	Terminal Board T360B	42011222	1	42011222	1
23	Transformer	43110233	1	43110233	1
24	Electric Box Cover I	20102702	1	20102702	1
25	Electric Box Cover II	20102703	1	20102703	1
26	Main Board	30226316	1	30226316	1
27	Capacitor	33010010	1	33010010	1
28	Rubber plug	76712701	1	76712701	1
29	Evaporator	01038778	1	01038778	1
30	Evaporator Support	01072003	2	01072003	2
31	Nut with Washer M6	70310012	1	70310012	1
32	Bolt subassembly	70210051	1	70210051	1
33	Pipe Pump PJV-1415	43130324	1	43130324	1
34	Pump Gasket	76712702	3	76712702	3
35	Pump Support	01332001	1	01332001	1
36	Water Level Switch	45010201	1	45010201	1
37	Drainage hose Pump	05232721	1	05232721	1
38	Right Side Plate	01302710	1	01302710	1
39	Cable-cross Loop	76512702	1	76512702	1
40	Pump Cover	01252710	1	01252710	1
41	Bolt	70212701	3	70212701	3
42	Electronic Expansive Valve	0713411201/07334281	1	0713411201/07334281	1

No.	Part Name	GMV-R45T/Na-K,GMV-R50T/Na-K		GMVL-R45T/Na-K,GMVL-R50T/Na-K	
		Code	Qty.	Code	Qty.
1	Tube Exit Plate	01382710	1	01382710	1
2	Body Fixed Plate	01332701	4	01332701	4
3	Front Side Plate	01302717	1	01302717	1
4	Left Side Plate	01302740	1	01302740	1
5	Base Plate	01222702	1	01222702	1
6	Rear Side Plate	01302719	1	01302719	1
7	Bottom Foam	52012716	1	52012716	1
8	Motor Gasket	76712711	3	76712711	3
9	Bolt	70212701	3	70212701	3
10	Motor Fixer	01702701	1	01702701	1
11	Fan Motor	15704901	1	15704901	1
12	Centrifugal Fan	10312721	1	10312721	1
13	Evaporator Connection	01072004	1	01072004	1
14	Cable-cross Loop	76513101	2	76513101	2
15	shunt	07228807	1	07228807	1
16	Water Tray	12412701	1	12412701	1
17	Screw	70140032	4	70140032	4
18	Electric Box Base Plate	01412721	1	01412721	1
19	Flow Guide Loop	10372701	1	10372701	1
20	Electric Box	20102701	1	20102701	1
21	Wire Clamp	71010102	4	71010102	4
22	Terminal Board T360B	42011222	1	42011222	1
23	Transformer	43110233	1	43110233	1
24	Electric Box Cover I	20102702	1	20102702	1
25	Electric Box Cover II	20102703	1	20102703	1
26	Main Board	30226316	1	30226316	1
27	Capacitor	33010010	1	33010010	1
28	Rubber plug	76712701	1	76712701	1
29	Evaporator	01038778	1	01038778	1
30	Evaporator Support	01072003	2	01072003	2
31	Nut with Washer M6	70310012	1	70310012	1
32	Bolt subassembly	70210051	1	70210051	1
33	Pipe Pump PJV-1415	43130324	1	43130324	1
34	Pump Gasket	76712702	3	76712702	3
35	Pump Support	01332001	1	01332001	1
36	Water Level Switch	45010201	1	45010201	1
37	Drainage hose Pump	05232721	1	05232721	1
38	Right Side Plate	01302710	1	01302710	1
39	Cable-cross Loop	76512702	1	76512702	1
40	Pump Cover	01252710	1	01252710	1
41	Bolt	70212701	3	70212701	3
42	Electronic Expansive Valve	0713411201/07334281	1	0713411201/07334281	1

No.	Part Name	GMV-R56/63/71/80T/Na-K		GMVL-R56/63/71/80T/Na-K	
		Code	Qty.	Code	Qty.
1	Tube Exit Plate	01382711	1	01382711	1
2	Body Fixed Plate	01332701	4	01332701	4
3	Front Side Plate	01302718	1	01302718	1
4	Left Side Plate	01302715	1	01302715	1
5	Base Plate	01222702	1	01222702	1
6	Rear Side Plate	01302714	1	01302714	1
7	Bottom Foam	52012711	1	52012711	1
8	Motor Gasket	76712711	3	76712711	3
9	Bolt	70212701	3	70212701	3
10	Motor Fixer	01702701	1	01702701	1
11	Fan Motor	15704102	1	15704102	1
12	Centrifugal Fan	10312705	1	10312705	1
13	Evaporator Connection	01072710	1	01072710	1
14	Cable-cross Loop	76513101	2	76513101	2
15	shunt	07228806	1	07228806	1
16	Water Tray	12412701	1	12412701	1
17	Screw	70140032	4	70140032	4
18	Electric Box Base Plate	01412721	1	01412721	1
19	Flow Guide Loop	10372701	1	10372701	1
20	Electric Box	20102701	1	20102701	1
21	Wire Clamp	71010102	4	71010102	4
22	Terminal Board T360B	42011222	1	42011222	1
23	Transformer	43110233	1	43110233	1
24	Electric Box Cover I	20102702	1	20102702	1
25	Electric Box Cover II	20102703	1	20102703	1
26	Main Board	30226316	1	30226316	1
27	Capacitor	33010010	1	33010010	1
28	Rubber plug	76712701	1	76712701	1
29	Evaporator	01004641	1	01004641	1
30	Evaporator Support	01072715	2	01072715	2
31	Nut with Washer M6	70310012	1	70310012	1
32	Bolt subassembly	70210051	1	70210051	1
33	Pipe Pump PJV-1415	43130324	1	43130324	1
34	Pump Gasket	76712702	3	76712702	3
35	Pump Support	01332001	1	01332001	1
36	Water Level Switch	45010201	1	45010201	1
37	Drainage hose Pump	05232721	1	05232721	1
38	Right Side Plate	01302716	1	01302716	1
39	Cable-cross Loop	76512702	1	76512702	1
40	Pump Cover	01252711	1	01252711	1
41	Bolt	70212701	3	70212701	3
42	Electronic Expansive Valve	0713411401	1	0713411401	1

(2) GMV(L)-R90T/Na-K,GMV(L)-R112T/Na-K,GMV(L)-R125T/Na-K

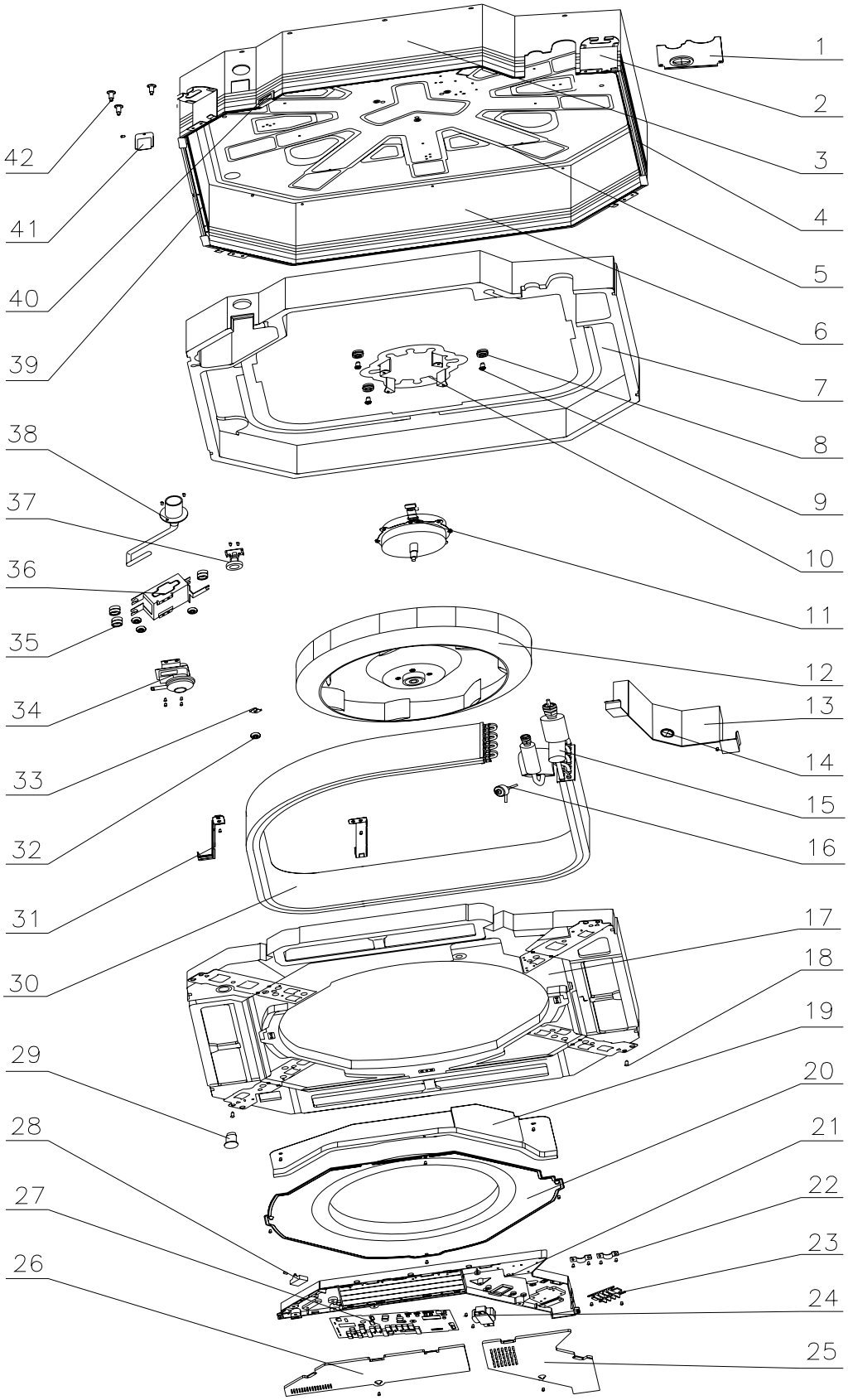

No.	Part Name	GMV-R90/112/125/Na-K		GMVL-R90/112/125/Na-K	
		Code	Qty.	Code	Qty.
1	Tube Exit Plate	01382711	1	01382711	1
2	Body Fixed Plate	01332701	4	01332701	4
3	Front Side Plate	01302713	1	01302713	1
4	Left Side Plate	`01302711	1	`01302711	1
5	Base Plate	01222702	1	01222702	1
6	Rear Side Plate	01302709	1	01302709	1
7	Bottom Foam	52012717	1	52012717	1
8	Motor Gasket	76712711	3	76712711	3
9	Bolt	70212701	3	70212701	3
10	Motor Fixer	01702701	1	01702701	1
11	Fan Motor	15704103	1	15704103	1
12	Centrifugal Fan	10310101	1	10310101	1
13	Evaporator Connection	01072733	1	01072733	1
14	Cable-cross Loop	76512702	2	76512702	2
15	shunt	07228804	1	07228804	1
16	Electronic Expansive Valve	`07334102	1	`07334102	1
17	Water Tray	12412701	1	12412701	1
18	Screw	70140032	4	70140032	4
19	Electric Box Base Plate	01412721	1	01412721	1
20	Flow Guide Loop	10372701	1	10372701	1
21	Electric Box	20102701	1	20102701	1
22	Wire Clamp	71010102	4	71010102	4
23	Terminal Board T360B	42011142	1	42011142	1
24	Transformer	43110233	1	43110233	1
25	Electric Box Cover I	20102702	1	20102702	1
26	Electric Box Cover II	20102703	1	20102703	1
27	Main Board	30226316	1	30226316	1
28	Capacitor	33010012	1	33010012	1
29	Rubber plug	76712701	1	76712701	1
30	Evaporator	01004640	1	01004640	1
31	Evaporator Support	01072708	2	01072708	2
32	Nut with Washer M6	70310012	1	70310012	1
33	Bolt subassembly	70210051	1	70210051	1
34	Pipe Pump PJV-1415	43130324	1	43130324	1
35	Pump Gasket	76712702	3	76712702	3
36	Pump Support	01332001	1	01332001	1
37	Water Level Switch	45010201	1	45010201	1
38	Drainage hose Pump	05232721	1	05232721	1
39	Right Side Plate	01302716	1	01302716	1
40	Cable-cross Loop	76512702	1	76512702	1
41	Pump Cover	01252711	1	01252711	1
42	Bolt	70212701	3	70212701	3

（3） GMV-R22T/NaA-K、GMVL-R22T/NaA –K、GMV-R28T/NaA-K、GMVL-R28T/NaA -Kexploded views

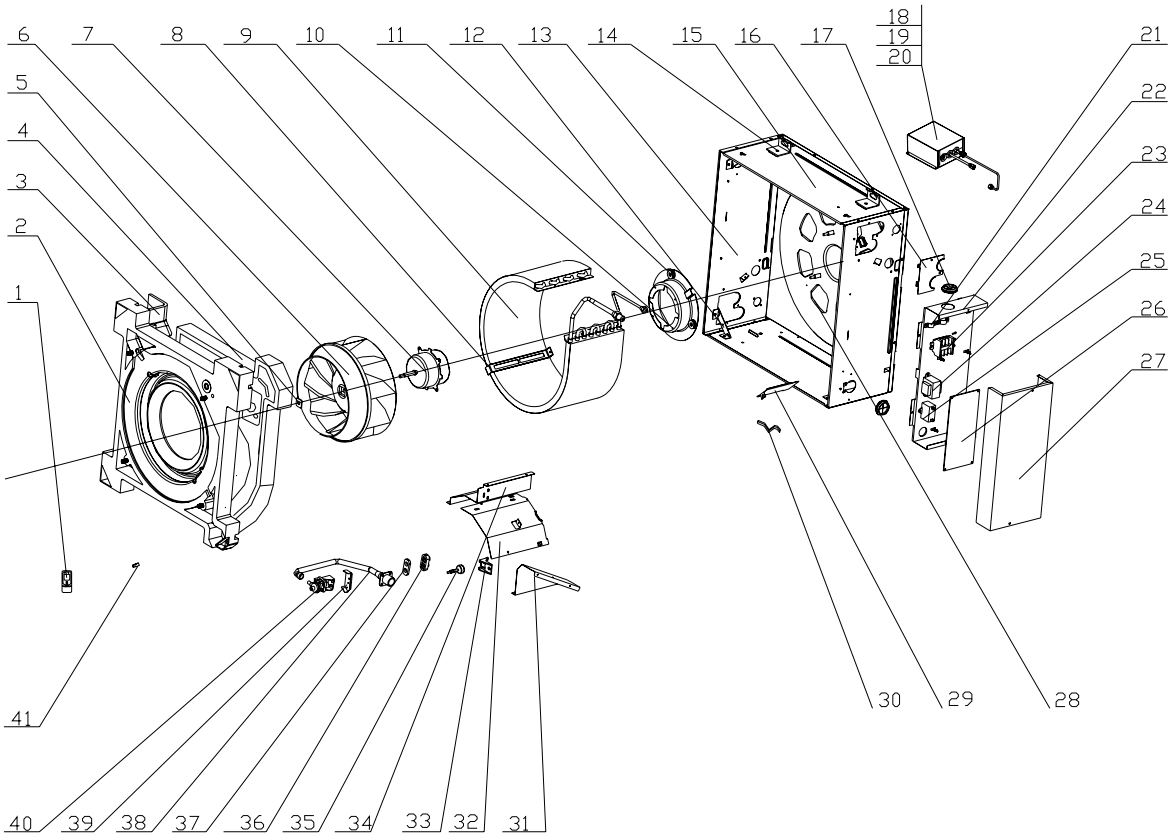

	Product Code	CM500N0100	
1	Display Board	1	30296309
2	Water Tray	1	20182703
3	Water Tray Foam for Fresh Air Intaking	1	12312702
4	Water Tray Foam	1	12312703
5	Fan Fixer	1	76712709
6	Centifugal Fan	1	10312702
7	Motor FN11T-1	1	15704114
8	Evap Support	1	01844136
9	Evaporator Assy	1	010027071
10	Motor Support	1	01702702
11	Motor Gasket	1	76712705
12	Water Tray support	1	01332706
13	Front Side Plate	1	01302741
14	Body Fixer	1	01332705
15	Right Side Plate	1	01302743
16	Tube-exit plate	1	01382719
17	Cable-cross Loop	1	76515202
18	Noise Elimination Box	1	07444103
19	Electronic Expansion Valve	1	07334282
20	Expansion Valve Winding	1	4304000101
21	Wire Clamp	2	71010102
22	Electric Box Assy	1	01394806
23	Terminal Board	1	42011106
24	Transformer	1	43110226
25	Capacitor CBB61 2.5uF/450VAC	1	33010026
26	Main PCB Z6G25C	1	30226199
27	Electric Box Cover	1	01424238
28	Base Plate	1	01222712
29	Cord Baffle Plate	1	01362701
30	Connecting Wire	1	40010232
31	Left Baffle Plate	1	01362703
32	Evap Connection	1	01072713
33	Water Level Switch Support	1	24212705
34	Right Baffle Plate	1	01362702
35	Water Level Switch	1	45012701
36	Pump Gasket 1	1	76712707
37	Pump Gasket 2	1	76712708
38	Pump Drainage	1	05232722
39	Pump Support	1	1332707
40	Water Pump PSB-7	1	43130320
41	Wire Clamp	1	71010105

(4)GMV-R36T/NaA -K、GMVL-R36T/NaA -K、GMV-R45T/NaA -K、GMVL-R45T/NaA -K、exploded views

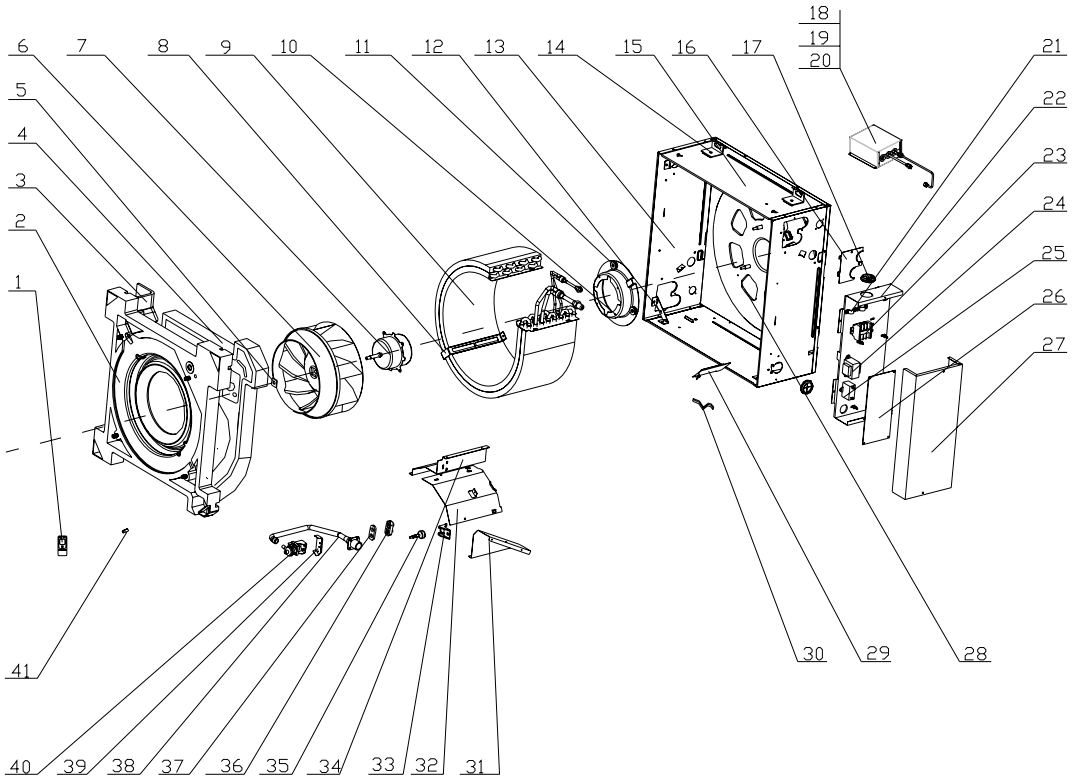

	Product Code	CM500N0120	
1	Display Board	1	30296309
2	Water Tray	1	20182703
3	Water Tray Foam for Fresh Air Intaking	1	12312702
4	Water Tray Foam	1	12312703
5	Fan Fixer	1	76712709
6	Centifugal Fan	1	10312702
7	Motor FN11T-1	1	15704114
8	Evap Support	1	01072714
9	Evaporator Assy	1	01029608
10	Motor Support	1	01702702
11	Motor Gasket	1	76712705
12	Water Tray support	1	01332706
13	Front Side Plate	1	01302741
14	Body Fixer	1	01332705
15	Right Side Plate	1	01302743
16	Tube-exit plate	1	01382719
17	Cable-cross Loop	1	76515202
18	Noise Elimination Box	1	07444103
19	Electronic Expansion Valve	1	07334282
20	Expansion Valve Winding	1	4304000101
21	Wire Clamp	2	71010102
22	Electric Box Assy	1	01394806
23	Terminal Board	1	42011106
24	Transformer	1	43110226
25	Capacitor CBB61 2.5uF/450VAC	1	33010026
26	Main PCB Z6G25C	1	30226199
27	Electric Box Cover	1	01424238
28	Base Plate	1	01222712
29	Cord Baffle Plate	1	01362701
30	Connecting Wire	1	40010232
31	Left Baffle Plate	1	01362703
32	Evap Connection	1	01072713
33	Water Level Switch Support	1	24212705
34	Right Baffle Plate	1	01362702
35	Water Level Switch	1	45012701
36	Pump Gasket 1	1	76712707
37	Pump Gasket 2	1	76712708
38	Pump Drainage	1	05232722
39	Pump Support	1	1332707
40	Water Pump PSB-7	1	43130320
41	Wire Clamp	1	71010105

Note：① is only the part of GMV-R28T/NaA-K;
② is only the part of GMVL-R36T/NaA-K;

5.2 .2 Duct Type Unit

(1) GMV(L)-R22P/Na-K,GMV(L)-R25P/Na-K,GMV(L)-R28P/Na-K,GMV(L)-R32P/Na-K,GMV(L)-R36P/Na-K

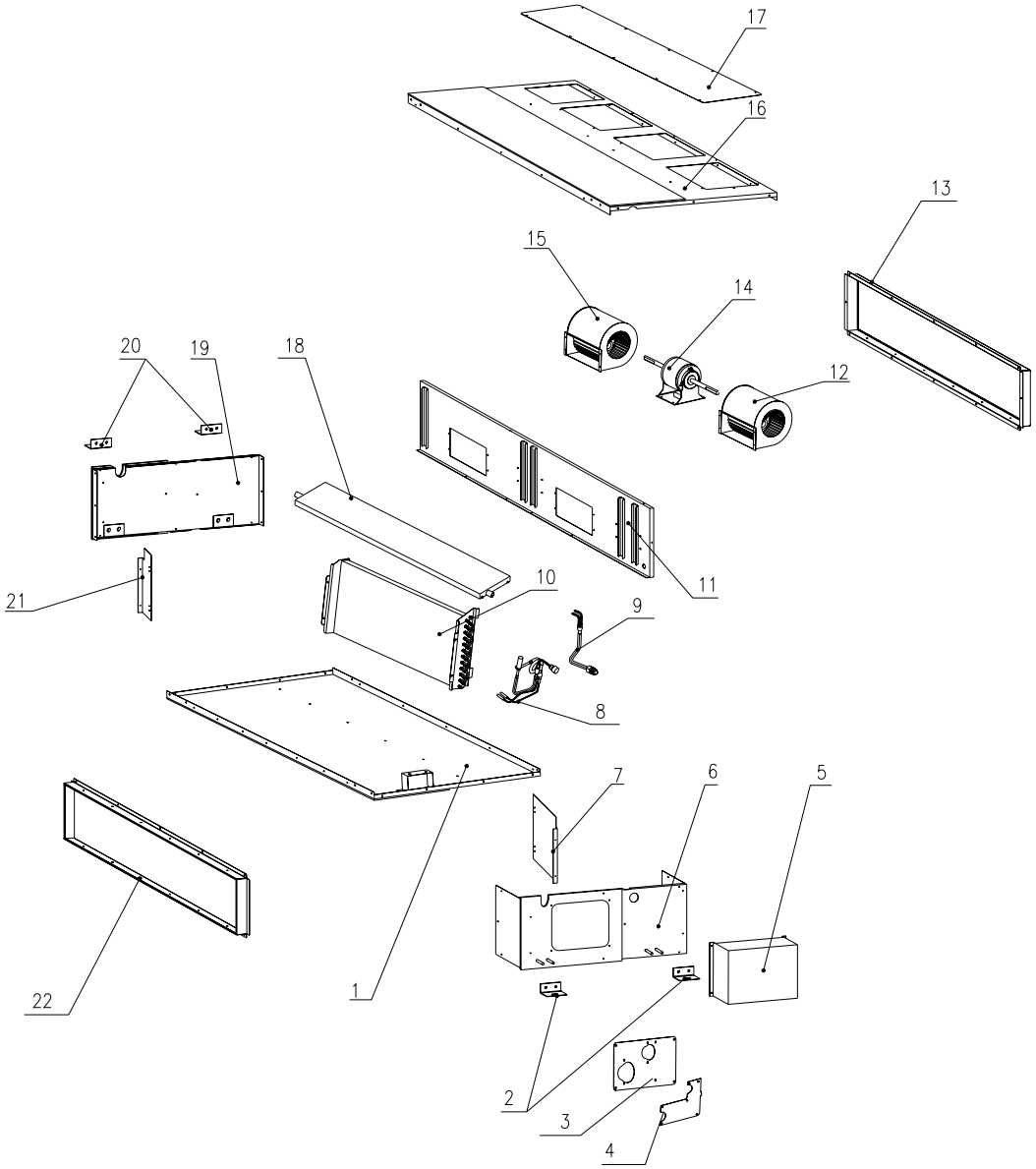

No.	Part Name	GMV(L)-R22P/Na-K,GMV(L)-R25P/Na-K		GMV(L)-R28P/Na-K,GMV(L)-R32P/Na-K,GMV(L)-R36P/Na-K	
		Code	Qty.	Code	Qty.
1	Top Cover Sub-assy	01259052	1	01259052	1
2	Hook	02112446	2	02112446	2
3	Seal of Left Side Plate Sub-assy	01499051	1	01499051	1
4	Seal of Connection Pipe Sub-assy	01499053	1	01499053	1
5	Electric Box Assy	01408739	1	01394605	1
6	Left Side Plate Sub-assy	01308788	1	01308788	1
7	Left Support of Evaporator	01078774	1	01078774	1
8	Liquid-entered Pipe Sub-assy	03334601	1	03338810	1
9	Collect Gas Pipe Sub-assy	01305018	1	04674609	1
10	Evaporator Sub-assy	01038785	1	01038786	1
11	Fan Fixed Plate Sub-assy	01339095	1	01339095	1
12	Centrifugal fan	10319051	1	10319051	1
13	Return air inlet side-board Sub-assy	01499055	1	01499055	1
14	Motor	15019053	1	15019522	1
15	Centrifugal fan	10319051	1	10319051	1
16	Bottom Cover	01259086	1	01259086	1
17	Cover of Air-in	01259056	1	01259056	1
18	Water Tray Assy	01279051	1	01279051	1
19	Right Side Plate Sub-assy	01309055	1	01309055	1
20	Hook	02112446	2	02112446	2
21	Left Support of Evaporator	01079056	1	01079056	1
22	Return air inlet side-board Sub-assy	01498783	1	01498783	1

（2）GMV(L)-R40P/Na-K,GMV(L)-R45P/Na-K,GMV(L)-R50P/Na-K

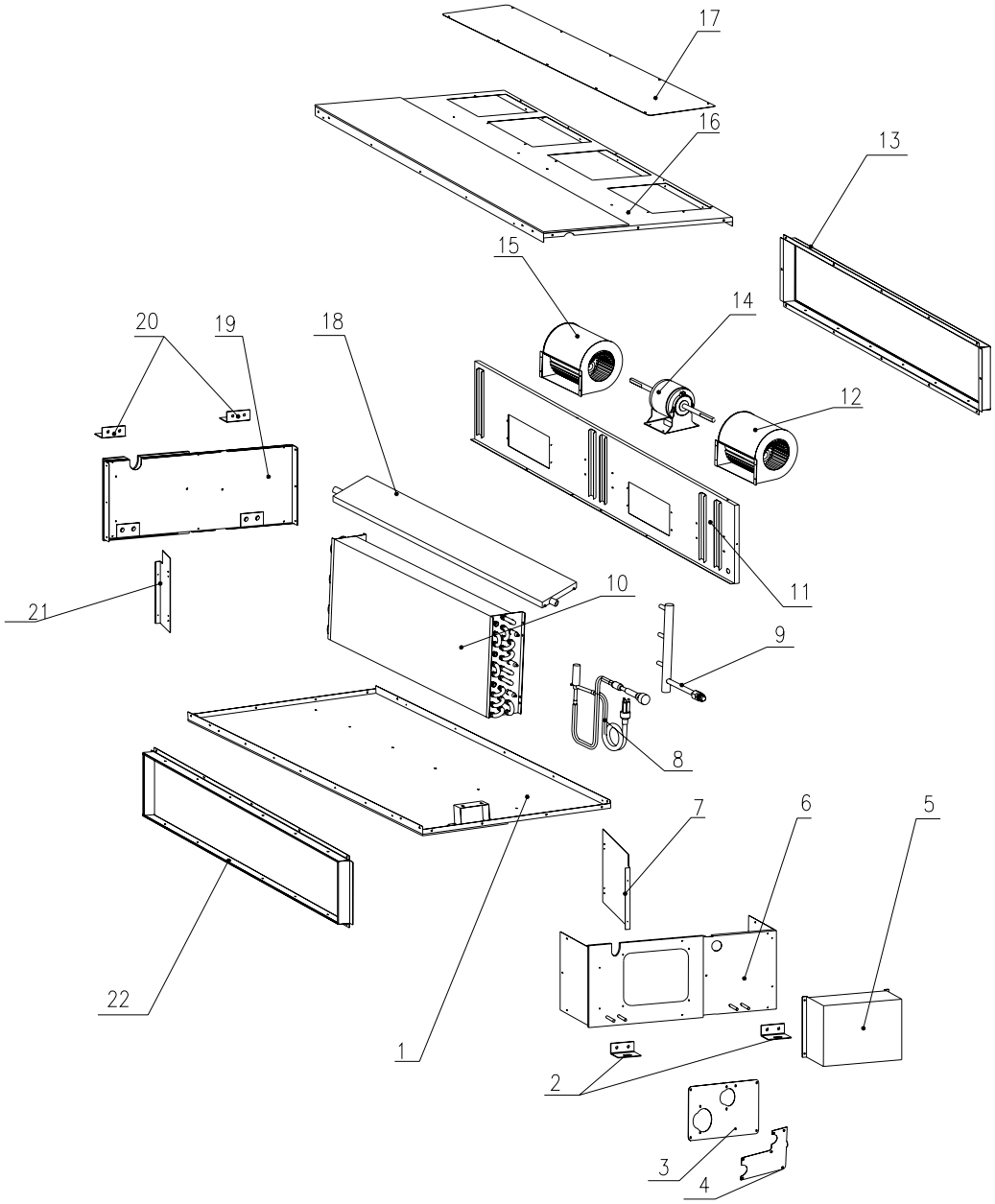

No.	Part Name	GMV(L)-R40P/Na-K,GMV(L)-R45P/Na-K,GMV(L)-R50P/Na-K	
		Code	Qty.
1	Top Cover Sub-assy	01259064	1
2	Hook	02112446	2
3	Seal of Connection Pipe 2	01498644	1
4	Seal of Connection Pipe 1	01498604	1
5	Electric Box Assy	01404688	1
6	Left Side Plate Sub-assy	01308668	1
7	Left Support of Evaporator	01078629	1
8	Liquid-entered Pipe Sub-assy	04324601	1
9	Collect Gas Pipe Sub-assy	04674601	1
10	Evaporator Sub-assy	01038623	1
11	Fan Fixed Plate Sub-assy	01339058	1
12	Centrifugal fan	10319051	1
13	Return air inlet Sub-assy	01499061	1
14	Motor FG70B	15018322	1
15	Centrifugal fan	10319051	1
16	Bottom Cover	01258649	1
17	Cover of Air-in	01258650	1
18	Water Tray Sub-assy	01278633	1
19	Right Side Plate Sub-assy	01308670	1
20	Hook	02112446	2
21	Left Support of Evaporator	01078625	1
22	Return air inlet Sub-assy	01498641	1

（3）GMV(L)-R56P/Na-K,GMV(L)-R63P/Na-K,GMV(L)-R71P/Na-K,GMV(L)-R80P/Na-K

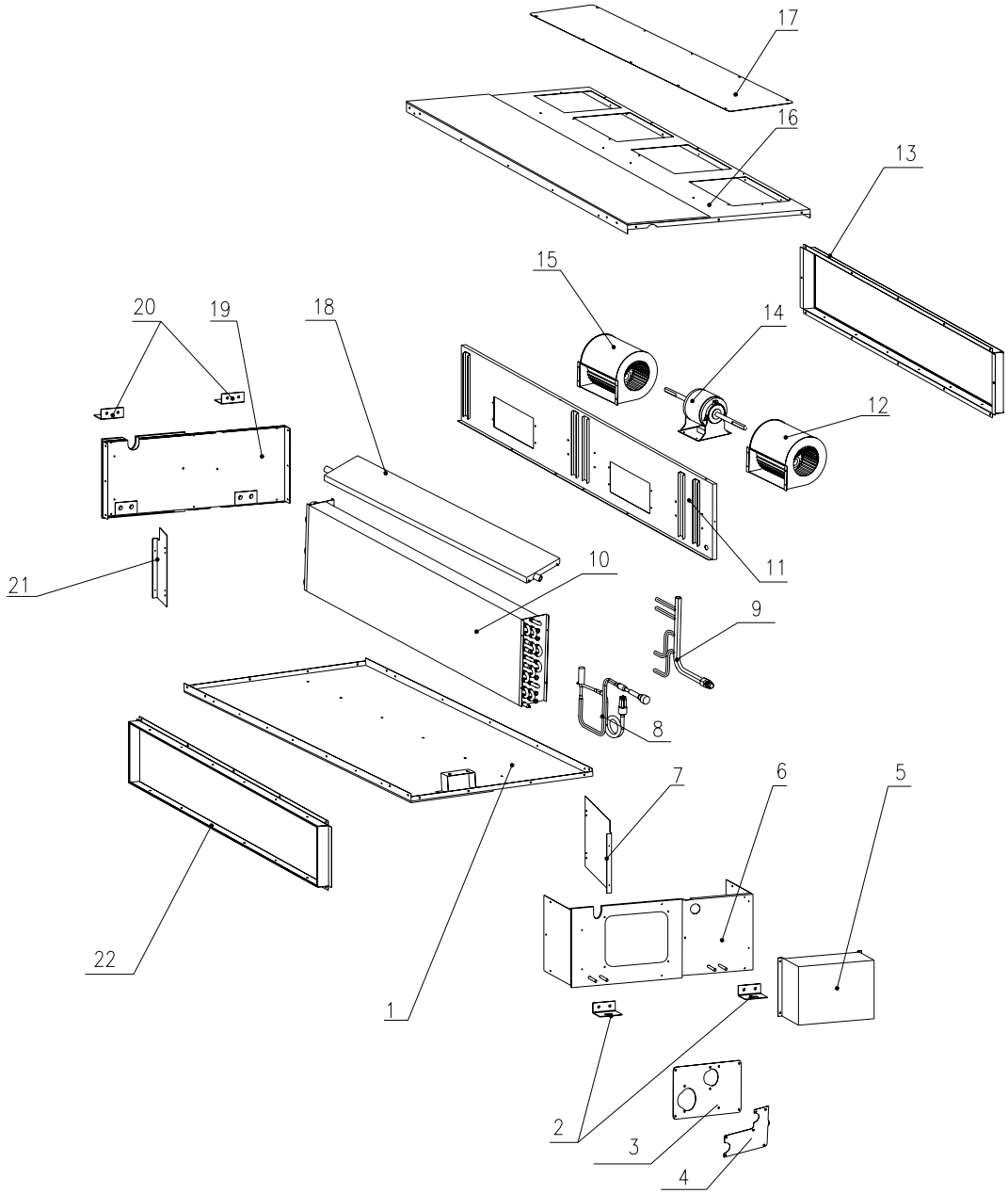

No.	Part Name	GMV(L)-R56P/Na-K,GMV(L)-R63P/Na-K,GMV(L)-R71P/Na-K,GMV(L)-R80P/Na-K	
		Code	Qty.
1	Top Cover Sub-assy	01258652	1
2	Hook	02118504	2
3	Left Side Seal-hole Plate Sub-assy	01308680	1
4	Seal of Connection Pipe	01498610	1
5	Electric Box Assy	01394609	1
6	Left Side Plate Sub-assy	01308676	1
7	Left Support of Evaporator	01078603	1
8	Liquid-entered Pipe Sub-assy	04324603	1
9	Collect Gas Pipe Sub-assy	04674602	1
10	Evaporator Sub-assy	01054601	1
11	Fan Fixed Plate Sub-assy	01338631	1
12	Fan Motor (Left)SYP-200/190J-1	15018603	1
13	Return air inlet side-board Sub-assy	01499074	1
14	Motor FG150B	15018612	1
15	Fan motor (Right)SYP-200/190J-1	15018604	1
16	Bottom Cover	01258612	1
17	Cover of Air-in	01258614	1
18	Water Tray Assy	01278612	1
19	Right Side Plate Sub-assy	01308677	1
20	Hook	02118504	2
21	Left Support of Evaporator	01078604	1
22	Return air inlet Sub-assy	01498612	1

(4) GMV(L)-R90P/Na-K,GMV(L)-R100P/Na-K,GMV(L)-R112P/Na-K,GMV(L)-R125P/Na-K,GMV(L)-R140P/Na-K

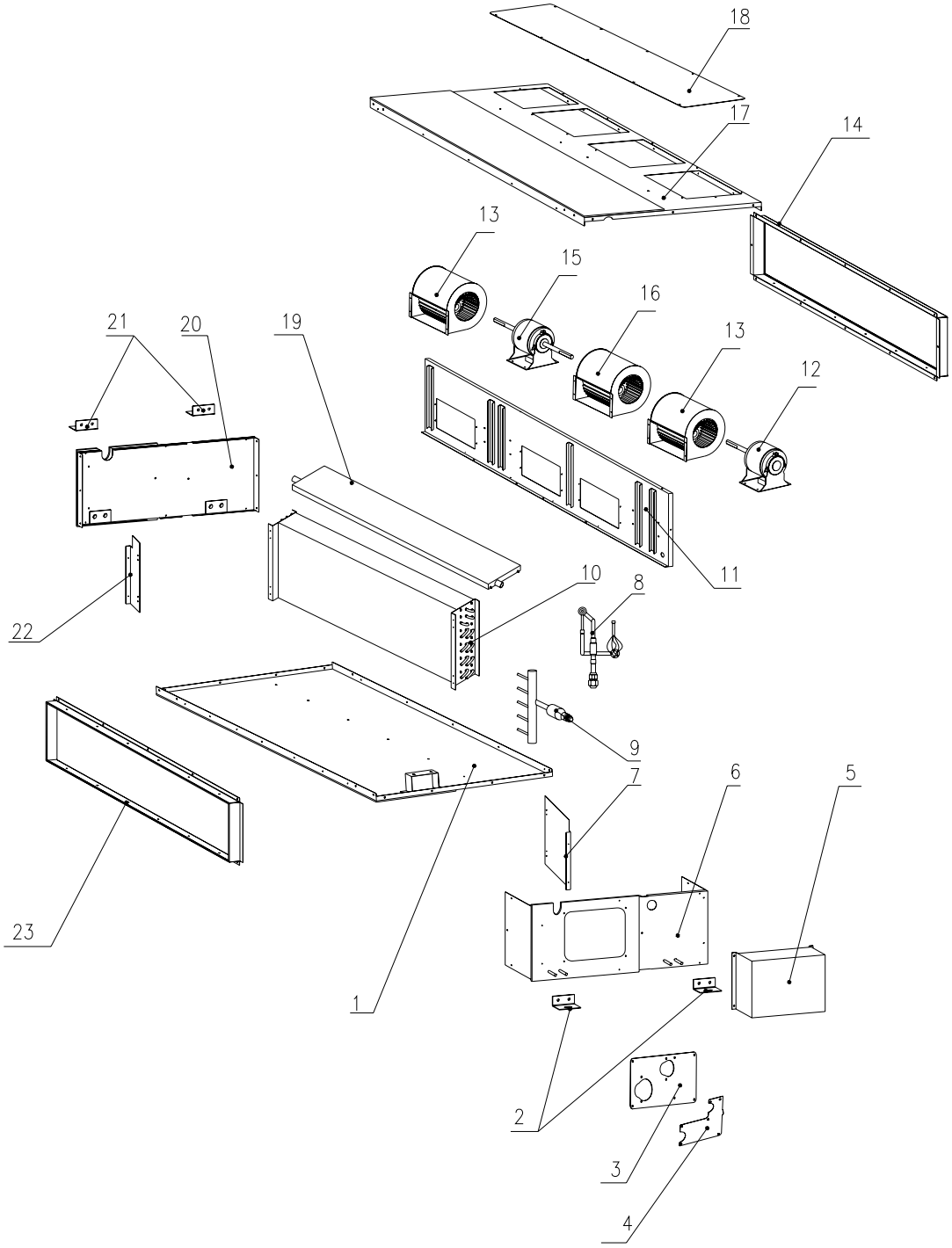

No.	Part Name	GMV(L)-R90P/Na-K,GMV(L)-R100P/Na-K,GMV(L)-R112P/Na-K,GMV(L)-R125P/Na-K,GMV(L)-R140P/Na-K	
		Code	Qty.
1	Top Cover Sub-assy	01258606	1
2	Hook	02118504	2
3	Left Side Seal-hole Plate Sub-assy	01308673	1
4	Seal of Connection Pipe	01498601	1
5	Electric Box Assy	01394602	1
6	Left Side Plate Sub-assy	01308676	1
7	Left Support of Evaporator	01078603	1
8	Liquid-entered Pipe Sub-assy	03338802	1
9	Collect Gas Pipe Sub-assy	04674608	1
10	Evaporator Sub-assy	01038624	1
11	Fan Fixed Plate Sub-assy	01338630	1
12	Motor FG75B	15018613	
13	Fan Motor (Left)SYP-200/190J-1	15018603	2
14	Return air inlet side-board Sub-assy	01499066	1
15	Motor FG150B	15018612	1
16	Fan motor (Right)SYP-200/190J-1	15018604	1
17	Bottom Cover Assy	01258603	1
18	Cover of Air-in	01258602	1
19	Water Tray Assy	01278603	1
20	Right Side Plate Sub-assy	01308677	1
21	Hook	02118504	2
22	Left Support of Evaporator	01078604	1
23	Return air inlet Sub-assy	01498608	1

GMV（L）-R22P/NaB-K, GMV（L）-R22PS/NaB-K, GMV（L）-R28P/NaB-K, GMV（L）-R28PS/NaB-K, GMV（L）-R36P/NaB-K, GMV（L）-R36PS/NaB-K,☆GMV（L）-R45P/NaB-K, GMV（L）-R45PS/NaB-K, GMV（L）-R56P/NaB-K, GMV（L）-R56PS/NaB-K, GMV（L）-R71P/NaB-K, GMV（L）-R71PS/NaB-K

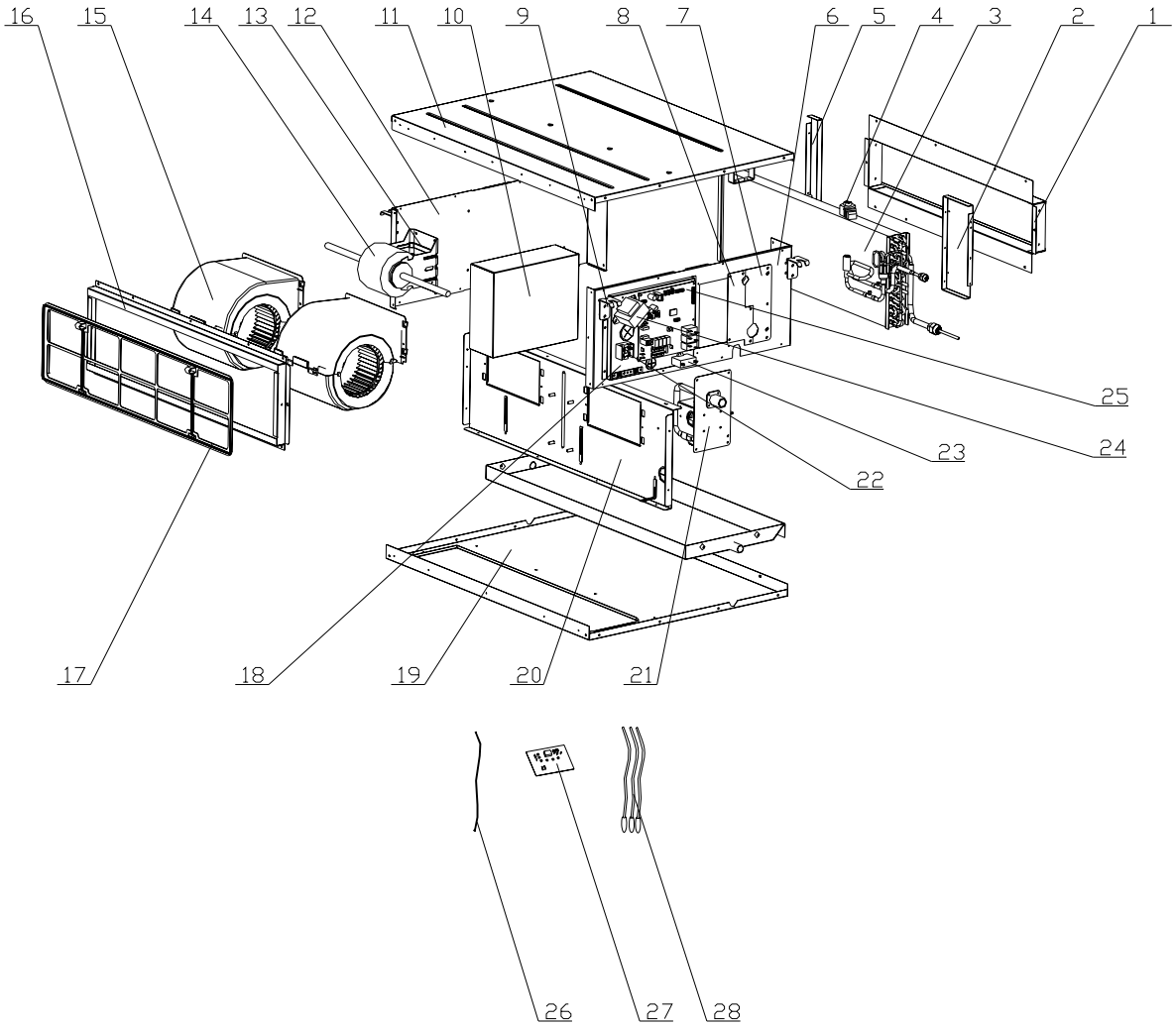

List of components

No	Name	Material Code	Qty		
			GMVL-R22P/NaB-K	GMVL-R28P/NaB-K	GMVL-R36P/NaB-K
1	Side Plate of Air outlet	01494118	1	1	1
2	Left Support of Evaporator	01094122	1	1	1
3	Evaporator Assy	01024231	1		
		01024232		1	1
4	Electric expand valve fitting	43040001	1	1	1
5	Right Support of Evaporator	01094121	1	1	1
6	Left Side Plate Sub -assy	01314172	1	1	1
7	Seal of left side Plate Sub-assy	01494115	1	1	1
8	Seal of Connection Pipe Sub-assy	01494132	1	1	1
9	Hook	02112446	4	4	4
10	Electric Box Cover	01424319	1	1	
11	Top Cover Board Assy	01264176	1	1	1
12	Right Side Plate Sub -assy	01314175	1	1	1
13	Motor Support	0170905801	1	1	1
14	Fan Motor	1570520103	1		
		1570520201		1	1
15	Motor Sub-assy	150024011	1	1	1
16	Border Plate Assy of Air Return End	02225234	1	1	1
17	Filter	11725202	1	1	1
18	Electric Box	01394991	1	1	1
19	Lower Cover Plate Sub-assy	01264178	1	1	1
20	Fan motor mounting Plate Sub-assy	01324341	1	1	1
21	Water Pump Assy	15404117	0	0	0
22	Terminal Border	42011106	1	1	1
23	Capacitor	33010027	1	1	1
24	Transformer	43110237	1	1	1
25	Main Bord	30226167	1	1	1
26	Connecting Wire	4001039509	1	1	1
27	Display Bord	30296013	1	1	1
28	Sensor sub-assy	39008026	1	1	1

No	Name	Material Code	Qty		
			GMVL-R22PS/NaB-K	GMVL-R28PS/NaB-K	GMVL-R36PS/NaB-K
1	Side Plate of Air outlet	01494118	1	1	1
2	Left Support of Evaporator	01094122	1	1	1
3	Evaporator Assy	01024231	1		
		01024230		1	
		01024232			1
4	Electric expand valve fitting	43040001	1	1	1
5	Right Support of Evaporator	01094121	1	1	1
6	Left Side Plate Sub -assy	01314172	1	1	1
7	Seal of left side Plate Sub-assy	01494115	1	1	1
8	Seal of Connection Pipe Sub-assy	01494116	1	1	1
9	Hook	02112446	4	4	4
10	Electric Box Cover	01424319	1	1	
11	Top Cover Board Assy	01264176	1	1	1
12	Right Side Plate Sub -assy	01314175	1	1	1
13	Motor Support	0170905801	1	1	1
14	Fan Motor	1570520103	1		
		1570520201		1	1
15	Motor Sub-assy	150024011	1	1	1
16	Border Plate Assy of Air Return End	02225234	1	1	1
17	Filter	11725202	1	1	1
18	Electric Box	01394994	1	1	1
19	Lower Cover Plate Sub-assy	01264178	1	1	1
20	Fan motor mounting Plate Sub-assy	01324341	1	1	1
21	Water Pump Assy	15404117	1	1	1
22	Terminal Border	42011106	1	1	1
23	Capacitor	33010027	1	1	1
24	Transformer	43110237	1	1	1
25	Main Bord	30226221	1	1	1
26	Connecting Wire	4001039509	1	1	1
27	Display Bord	30296013	1	1	1
28	Sensor sub-assy	39008026	1	1	1

No	Name	Material Code	Qty		
			GMV-R22P/NaB-K	GMV-R28P/NaB-K	GMV-R36P/NaB-K
1	Side Plate of Air outlet	01494118	1	1	1
2	Left Support of Evaporator	01094122	1	1	1
3	Evaporator Assy	01024231	1		
		01024232		1	1
4	Electric expand valve fitting	43040001	1	1	1
5	Right Support of Evaporator	01094121	1	1	1
6	Left Side Plate Sub -assy	01314172	1	1	1
7	Seal of left side Plate Sub-assy	01494115	1	1	1
8	Seal of Connection Pipe Sub-assy	01494132	1	1	1
9	Hook	02112446	4	4	4
10	Electric Box Cover	01424319	1	1	
11	Top Cover Board Assy	01264176	1	1	1
12	Right Side Plate Sub -assy	01314175	1	1	1
13	Motor Support	0170905801	1	1	1
14	Fan Motor	1570520103	1		
		1570520201		1	1
15	Motor Sub-assy	150024011	1	1	1
16	Border Plate Assy of Air Return End	02225234	1	1	1
17	Filter	11725202	1	1	1
18	Electric Box	01394978	1	1	1
19	Lower Cover Plate Sub-assy	01264178	1	1	1
20	Fan motor mounting Plate Sub-assy	01324341	1	1	1
21	Water Pump Assy	15404117	0	0	0
22	Terminal Border	42011106	1	1	1
23	Capacitor	33010027	1	1	1
24	Transformer	43110237	1	1	1
25	Main Bord	30226168	1	1	1
26	Connecting Wire	4001039509	1	1	1
27	Display Bord	30296014	1	1	1
28	Sensor sub-assy	39008026	1	1	1

No	Name	Material Code	Qty		
			GMV-R22PS/NaB-K	GMV-R28PS/NaB-K	GMV-R36PS/NaB-K
1	Side Plate of Air outlet	01494118	1	1	1
2	Left Support of Evaporator	01094122	1	1	1
3	Evaporator Assy	01024231	1		
		01024230		1	
		01024232			1
4	Electric expand valve fitting	43040001	1	1	1
5	Right Support of Evaporator	01094121	1	1	1
6	Left Side Plate Sub-assy	01314172	1	1	1
7	Seal of left side Plate Sub-assy	01494115	1	1	1
8	Seal of left Connection Pipe Sub-assy	01494116	1	1	1
9	Hook	02112446	4	4	4
10	Electric Box Cover	01424319	1	1	
11	Top Cover Board Assy	01264176	1	1	1
12	Right Side Plate Sub -assy	01314175	1	1	1
13	Motor Support	0170905801	1	1	1
14	Fan Motor	1570520103	1		
		1570520201		1	1
15	Motor Sub-assy	150024011	1	1	1
16	Border Plate Assy of Air Return End	02225234	1	1	1
17	Filter	11725202	1	1	1
18	Electric Box	01394977	1	1	1
19	Lower Cover Plate Sub-assy	01264178	1	1	1
20	Fan motor mounting Plate Sub-assy	01324341	1	1	1
21	Water Pump Assy	15404117	1	1	1
22	Terminal Border	42011106	1	1	1
23	Capacitor	33010027	1	1	1
24	Transformer	43110237	1	1	1
25	Main Bord	30226222	1	1	1
26	Connecting Wire	4001039509	1	1	1
27	Display Bord	30296014	1	1	1
28	Sensor sub-assy	39008026	1	1	1

No	Name	Material Code	Qty	
			GMVL-R45PS/NaB-K	GMVL-R45P/NaB-K
1	Side Plate of Air outlet	01498641	1	1
2	Left Support of Evaporator	01805280	1	1
3	Evaporator Sub-assy	01024211	1	1
4	Electric expand valve fitting	43040001	1	1
5	Right Support of Evaporator	01078625	1	1
6	Left Side Plate Sub-assy	01314230	1	1
7	Seal of left side Plate Sub-assy	01494128	1	1
8	Seal of Connection Pipe Sub-assy	01498640	1	1
9	Hook	02112466	4	4
10	Electric Box Cover	01425249	1	1
11	Top Cover Board Assy	01259064	1	1
12	Right Side Plate Sub-assy	01308670	1	1
13	Motor Support	01709056	1	1
14	Fan Motor	1501832202	1	1
15	Motor Sub-assy	15002401	2	2
16	Border Plate Assy of Air Return End	02225234	1	1
17	Filter	11725202	1	1
18	Electric Box	01394739	1	1
19	Lower Cover Plate Sub-assy	01265296	1	1
20	Fan motor mounting Plate Sub-assy	01339058	1	1
21	Water Pump Assy	15404121	1	0
22	Terminal Border	42011106	1	1
23	Capacitor	33010010	1	1
24	Transformer	43110237	1	1
25	Main Bord	30226221	1	
		30226167		1
26	Connecting Wire	4001039509	1	1
27	Display Bord	30296013	1	1
28	Sensor sub-assy	39004167	1	1

No	Name	Material Code	Qty	
			GMV-R45PS/NaB-K	GMV-R45P/NaB-K
1	Side Plate of Air outlet	01498641	1	1
2	Left Support of Evaporator	01805280	1	1
3	Evaporator Assy	01024211	1	1
4	Electric expand valve fitting	43040001	1	1
5	Right Support of Evaporator	01078625	1	1
6	Left Side Plate Sub-assy	01314230	1	1
7	Seal of left side Plate Sub-assy	01494128	1	1
8	Seal of Connection Pipe Sub-assy	01498640	1	1
9	Hook	02112466	4	4
10	Electric Box Cover	01425249	1	1
11	Top Cover Board Assy	01259064	1	1
12	Right Side Plate Sub -assy	01308670	1	1
13	Motor Support	01709056	1	1
14	Fan Motor	1501832202	1	1
15	Motor Sub-assy	15002401	2	2
16	Border Plate Assy of Air Return End	02225234	1	1
17	Filter	11725202	1	1
18	Electric Box	01394739	1	1
19	Lower Cover Plate Sub-assy	01265296	1	1
20	Fan motor mounting Plate Sub-assy	01339058	1	1
21	Water Pump Assy	15404121	1	0
22	Terminal Border	42011106	1	1
23	Capacitor	33010010	1	1
24	Transformer	43110237	1	1
25	Main Bord	30226222	1	
		30226168		1
26	Connecting Wire	4001039509	1	1
27	Display Bord	30296014	1	1
28	Sensor sub-assy	39004167	1	1

No	Name	Material Code	Qty	
			GMVL-R56P/NaB-K	GMVL-R71P/NaB-K
1	Side Plate of Air outlet	01499074	1	1
2	Left Support of Evaporator	01078603	1	1
3	Evaporator Assy	01024221	1	1
4	Electric expand valve fitting	43040001	1	1
5	Right Support of Evaporator	01078604	1	1
6	Left Side Plate Sub-assy	01315255	1	1
7	Seal of left side Plate Sub-assy	01308680	1	1
8	Seal of left Connection Pipe Sub-assy	01498610	1	1
9	Hook	02112466	4	4
10	Electric Box Cover	01425249	1	1
11	Top Cover Board Assy	01258651	1	1
12	Right Side Plate Sub -assy	01308679	1	1
13	Motor Support	01708502	1	1
14	Fan Motor	1570521101	1	1
15	Motor Sub-assy	15018603	1	1
		15018604	1	1
16	Border Plate Assy of Air Return End	01499074	1	1
17	Filter	11129066	1	1
18	Electric Box	01394962	1	1
19	Lower Cover Plate Sub-assy	01258612	1	1
20	Fan motor mounting Plate Sub-assy	01338632	1	1
21	Water Pump Assy	15404119	0	0
22	Terminal Border	42011106	1	1
23	Capacitor	33010014	1	1
24	Transformer	43110239	1	1
25	Main Bord	30226167	1	1
26	Connecting Wire	4001039509	1	1
27	Display Bord	30296013	1	1
28	Sensor sub-assy	39004167	1	1

No	Name	Material Code	Qty	
			GMVL-R56PS/NaB-K	GMVL-R71PS/NaB-K
1	Side Plate of Air outlet	01499074	1	1
2	Left Support of Evaporator	01078603	1	1
3	Evaporator Sub-assy	01024234	1	1
4	Electric expand valve fitting	43040001	1	1
5	Right Support of Evaporator	01078604	1	1
6	Left Side Plate Sub-assy	01314225	1	1
7	Seal of left side Plate Sub-assy	01494131	1	1
8	Seal of left Connection Pipe Sub-assy	01494129	1	1
9	Hook	02112466	4	4
10	Electric Box Cover	01425249	1	1
11	Top Cover Board Assy	01258651	1	1
12	Right Side Plate Sub -assy	01308679	1	1
13	Motor Support	01708502	1	1
14	Fan Motor	1570521101	1	1
15	Motor Sub-assy	15018603	1	1
		15018604	1	1
16	Border Plate Assy of Air Return End	01499074	1	1
17	Filter	11129066	1	1
18	Electric Box	01394997	1	1
19	Lower Cover Plate Sub-assy	01258612	1	1
20	Fan motor mounting Plate Sub-assy	01324350	1	1
21	Water Pump Assy	15404119	1	1
22	Terminal Border	42011106	1	1
23	Capacitor	33010014	1	1
24	Transformer	43110239	1	1
25	Main Bord	30226221	1	1
26	Connecting Wire	4001039509	1	1
27	Display Bord	30296013	1	1
28	Sensor sub-assy	39004167	1	1

No	Name	Material Code	Qty	
			GMV-R56P/NaB-K	GMV-R71P/NaB-K
1	Side Plate of Air outlet	01499074	1	1
2	Left Support of Evaporator	01078603	1	1
3	Evaporator Sub-assy	01024234	1	1
4	Electric expand valve fitting	43040001	1	1
5	Right Support of Evaporator	01078604	1	1
6	Left Side Plate Sub-assy	01314225	1	1
7	Seal of left side Plate Sub-assy	01494131	1	1
8	Seal of left Connection Pipe Sub-assy	01494129	1	1
9	Hook	02112466	4	4
10	Electric Box Cover	01425249	1	1
11	Top Cover Board Assy	01258651	1	1
12	Right Side Plate Sub-assy	01308679	1	1
13	Motor Support	01708502	1	1
14	Fan Motor	1570521101	1	1
15	Motor Sub-assy	15018603	1	1
		15018604	1	1
16	Border Plate Assy of Air Return End	01499074	1	1
17	Filter	11129066	1	1
18	Electric Box	01394997	1	1
19	Lower Cover Plate Sub-assy	01258612	1	1
20	Fan motor mounting Plate Sub-assy	01324350	1	1
21	Water Pump Assy	15404119	0	0
22	Terminal Border	42011106	1	1
23	Capacitor	33010014	1	1
24	Transformer	43110239	1	1
25	Main Bord	30226168	1	1
26	Connecting Wire	4001039509	1	1
27	Display Bord	30296014	1	1
28	Sensor sub-assy	39004167	1	1

No	Name	Material Code	Qty	
			~~GMVL-R56PS/NaB-K~~ ☆GMV-R56PS/NaB-K	~~GMVL-R71PS/NaB-K~~ ☆GMV-R71PS/NaB-K
1	Side Plate of Air outlet	01499074	1	1
2	Left Support of Evaporator	~~01078603~~ ☆01805279	1	1
3	Evaporator Assy	01024234	1	1
4	Electric expand valve fitting	43040001	1	1
5	Right Support of Evaporator	01078604	1	1
6	Left Side Plate Sub-assy	01314225	1	1
7	Seal of left side Plate Sub-assy	01494131	1	1
8	Seal of Connection Pipe Sub-assy	01494129	1	1
9	Hook	02112466	4	4
10	Electric Box Cover	01425249	1	1
11	Top Cover Board Assy	01258651	1	1
12	Right Side Plate Sub -assy	01308679	1	1
13	Motor Support	01708502	1	1
14	Fan Motor	1570521101	1	1
15	Motor Sub-assy	15018603	1	1
		15018604	1	1
16	Border Plate Assy of Air Return End	01499074	1	1
17	Filter	11129066/ ☆11129067	1	1
18	Electric Box	~~01394997~~ ☆01394739	1	1
19	Lower Cover Plate Sub-assy	01258612	1	1
20	Fan motor mounting Plate Sub-assy	01324350	1	1
21	Water Pump Assy	15404119	1	1
22	Terminal Border	42011106	1	1
23	Capacitor	33010014	1	1
24	Transformer	43110239	1	1
25	Main Bord	~~30226221~~ ☆30226222	1	1
26	Connecting Wire	4001039509 /☆40010232	1	1
27	Display Bord	~~30296013~~ ☆30296014	1	1
28	Sensor sub-assy	39004167	1	1
☆29	☆Remote Controller	☆305125063	☆1	☆1

☆GMV（L）-R90P/NaB-K, GMV（L）-R90PS/NaB-K, GMV（L）-R112P/NaB-K, GMV（L）-R112PS/NaB-K, GMV（L）-R140P/NaB-K, GMV（L）-R140PS/NaB-K

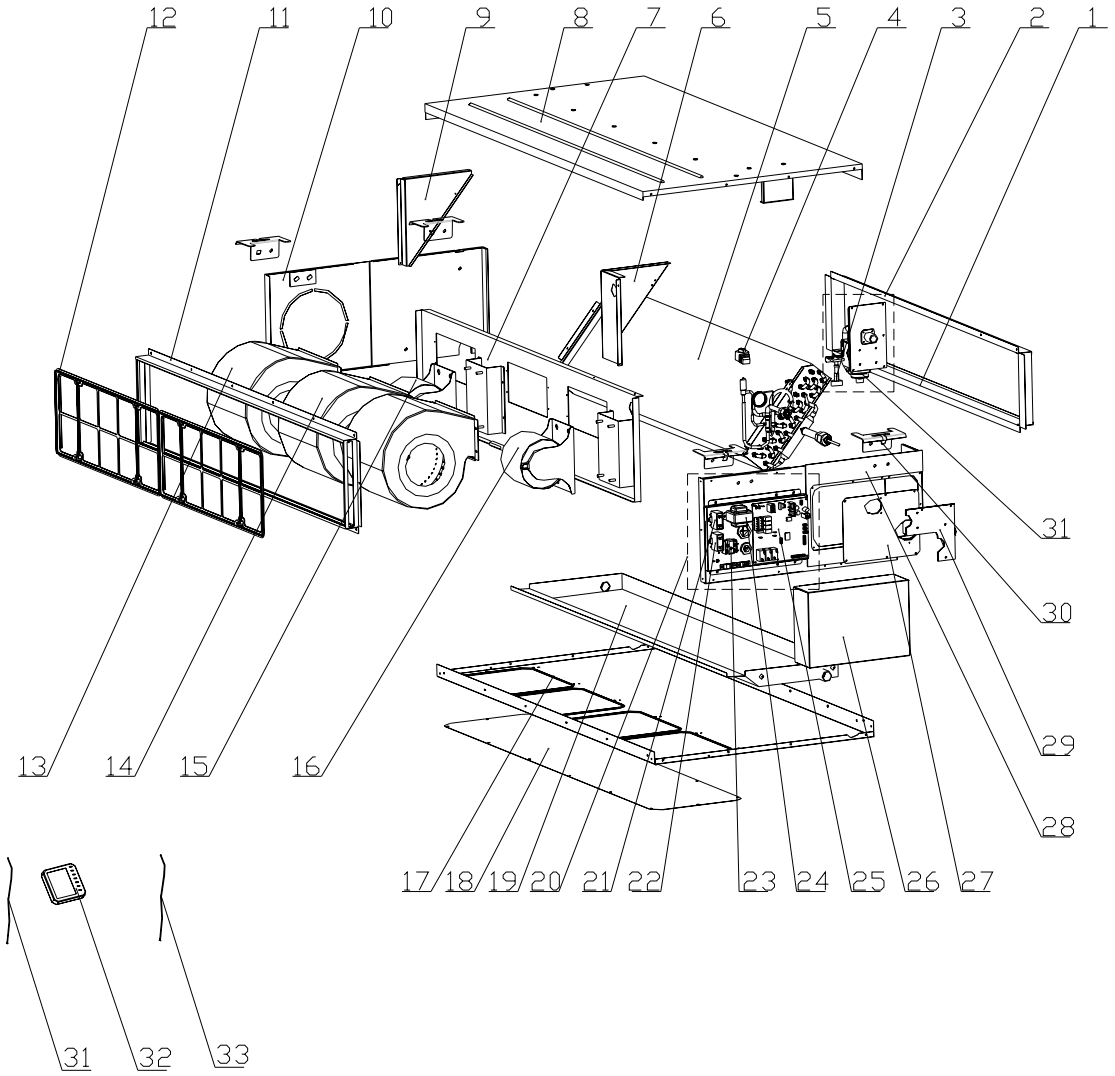

No	Name	Material Code	Qty		
			GMVL-R90P/NaB-K	GMVL-R112P/NaB-K	GMVL-R140P/NaB-K
1	Air outlet side board assy	01498608	1	1	1
2	Water pump assy	15404119	0	0	0
3	Water level switch	45010201	0	0	0
4	Electric expand valve fitting	43040001	1	1	1
5	Evaporator assy	01024222	1	1	
		01024218			1
6	Left support of evaporator	01805279	1	1	
		01804703			1
7	Fan motor mounting Plate Sub-assy	01324356	1	1	
		01804703			1
8	Top Cover Board Assy	01258607	1	1	
		01264627			1
9	Right support of evaporator	01078604	1	1	
		01805221			1
10	Right Side Plate Sub-assy	01308679	1	1	
11	Air intake side-board sub-assy	01375221	1	1	1
12	Filter Sub-assy	11725205	1	1	1
13	Fan Motor	15018603	2	2	2
14	Fan Motor	15018604	1	1	1
15	Motor	1570521101	1	1	
		1570520901			1
16	Motor	1570521201	1	1	
		1570521001			1
17	Bottom cover plate assy	01258603	1	1	
		0125860301			1
18	Cover of air-in	01258602	1	1	1
19	Water tray assy	01278603	1	1	
		01285229			1
20	Electric box assy	01394963	1	1	
		01394964			1
21	Capacitor	33010014	1	1	
		33010056			1
22	Capacitor	33010064	1	1	1
23	Terminal board	42011106	1	1	1
24	Transformer	43110239	1	1	1
25	Main board	30226167	1	1	1
26	Electric box cover	01425249	1	1	1
27	Seal of lefr side plate sub-assy	01308672	1	1	
		01495212			1
28	Left side plate assy	01315255	1	1	1
29	Seal of connection pipe	01498601	1	1	
		01495213			1
30	Hook	02118504	4	4	4
31	Connecting Wire	4001039509	1	1	1
32	Display board	30296013	1	1	1
33	Sersor sub-assy	39004167	1	1	1

No	Name	Material Code	Qty		
			GMVL-R90PS/NaB-K	GMVL-R112PS/NaB-K	GMVL-R140PS/NaB-K
1	Air outlet side board assy	01498608	1	1	1
2	Water pump assy	15404119	1	1	
		15404118			1
3	Water level switch	45010201	1	1	
		450102012			1
4	Electric expand valve fitting	43040001	1	1	1
5	Evaporator assy	01024233	1	1	
		01024218			1
6	Left support of evaporator	01805279	1	1	
		01804703			1
7	Fan motor mounting Plate Sub-assy	01324356	1	1	
		01325293			1
8	Top Cover Board Assy	01258607	1	1	
		01264627			1
9	Right support of evaporator	01078604	1	1	
		01805221			1
10	Right Side Plate Sub-assy	01308679	1	1	
11	Air intake side-board sub-assy	01375221	1	1	1
12	Filter Sub-assy	11725205	1	1	1
13	Fan Motor	15018603	2	2	2
14	Fan Motor	15018604	1	1	1
15	Motor	1570521101	1	1	
		1570520901			1
16	Motor	1570521201	1	1	
		1570521001			1
17	Bottom cover plate assy	01258603	1	1	
		0125860301			1
18	Cover of air-in	01258602	1	1	1
19	Water tray assy	01284160	1	1	
		01284157			1
20	Electric box assy	01394998	1	1	
		01394999			1
21	Capacitor	33010014	1	1	
		33010056			1
22	Capacitor	33010064	1	1	1
23	Terminal board	42011106	1	1	1
24	Transformer	43110239	1	1	1
25	Main board	30226221	1	1	1
26	Electric box cover	01425249	1	1	1
27	Seal of lefr side plate sub-assy	01494125	1	1	
		01494121			1
28	Left side plate assy	01494124	1	1	
		01314222			1
29	Seal of connection pipe	01494123	1	1	
		01494120			1
30	Hook	02118504	4	4	4
31	Connecting Wire	4001039509	1	1	1
32	Display board	30296013	1	1	1
33	Sersor sub-assy	39004167	1	1	1

No	Name	Material Code	Qty		
			GMV-R90P/NaB-K	GMV-R112P/NaB-K	GMV-R140P/NaB-K
1	Air outlet side board assy	01498608	1	1	1
2	Water pump assy	15404119	0	0	0
3	Water level switch	45010201	0	0	0
4	Electric expand valve fitting	43040001	1	1	1
5	Evaporator assy	01024222	1	1	
		01024218			1
6	Left support of evaporator	01805279	1	1	
		01804703			1
7	Fan motor mounting Plate Sub-assy	01324356	1	1	
		01325293			1
8	Top Cover Board Assy	01258607	1	1	
		01264627			1
9	Right support of evaporator	01078604	1	1	
		01805221			1
10	Right Side Plate Sub-assy	01308679	1	1	
11	Air intake side-board sub-assy	01375221	1	1	1
12	Filter Sub-assy	11725205	1	1	1
13	Fan Motor	15018603	2	2	2
14	Fan Motor	15018604	1	1	1
15	Motor	1570521101	1	1	
		1570520901			1
16	Motor	1570521201	1	1	
		1570521001			1
17	Bottom cover plate assy	01258603	1	1	
		0125860301			1
18	Cover of air-in	01258602	1	1	1
19	Water tray assy	01284160	1	1	
		01285229			1
20	Electric box assy	01394957	1	1	
		01394896			1
21	Capacitor	33010014	1	1	
		33010056			1
22	Capacitor	33010064	1	1	1
23	Terminal board	42011106	1	1	1
24	Transformer	43110239	1	1	1
25	Main board	30226168	1	1	1
26	Electric box cover	01425249	1	1	1
27	Seal of lefr side plate sub-assy	01308672	1	1	
		01495212			1
28	Left side plate assy	01315255	1	1	1
29	Seal of connection pipe	01498601	1	1	
		01495213			1
30	Hook	02118504	4	4	4
31	Connecting Wire	4001039509	1	1	1
32	Display board	30296014	1	1	1
33	Sersor sub-assy	39004167	1	1	1

No	Name	Material Code	Qty		
			GMV-R90PS/NaB-K	GMV-R112PS/NaB-K	GMV-R140PS/NaB-K
1	Air outlet side board assy	01498608	1	1	1
2	Water pump assy	15404119	1	1	
		15404118			1
3	Water level switch	45010201	1	1	
		450102012			1
4	Electric expand valve fitting	43040001	1	1	1
5	Evaporator assy	01024233	1	1	
		01024218			1
6	Left support of evaporator	01805279	1	1	
		01804703			1
7	Fan motor mounting Plate Sub-assy	01324356	1	1	
		01325293			1
8	Top Cover Board Assy	01258607	1	1	
		01264627			1
9	Right support of evaporator	01078604	1	1	
		01805221			1
10	Right Side Plate Sub-assy	01308679	1	1	
11	Air intake side-board sub-assy	01375221	1	1	1
12	Filter Sub-assy	11725205	1	1	1
13	Fan Motor	15018603	2	2	2
14	Fan Motor	15018604	1	1	1
15	Motor	1570521101	1	1	
		1570520901			1
16	Motor	1570521201	1	1	
		1570521001			1
17	Bottom cover plate assy	01258603	1	1	
		0125860301			1
18	Cover of air-in	01258602	1	1	1
19	Water tray assy	01284160	1	1	
		01284157			1
20	Electric box assy	01394986	1	1	
		01024218			1
21	Capacitor	33010014	1	1	
		33010056			1
22	Capacitor	33010064	1	1	1
23	Terminal board	42011106	1	1	1
24	Transformer	43110239	1	1	1
25	Main board	30226222	1	1	1
26	Electric box cover	01425249	1	1	1
27	Seal of lefr side plate sub-assy	01494124	1	1	
		01494121			1
28	Left side plate assy	01314225	1	1	
		01314222			1
29	Seal of connection pipe	01494120	1	1	
		01494123			1
30	Hook	02118504	4	4	4
31	Connecting Wire	4001039509	1	1	1
32	Display board	30296014	1	1	1
33	Sersor sub-assy	39004167	1	1	1

5.2 .3 Wall-Mounted Type Unit

(1) GMV(L)-R22G/NaB-K,GMV(L)-R28G/NaB-K

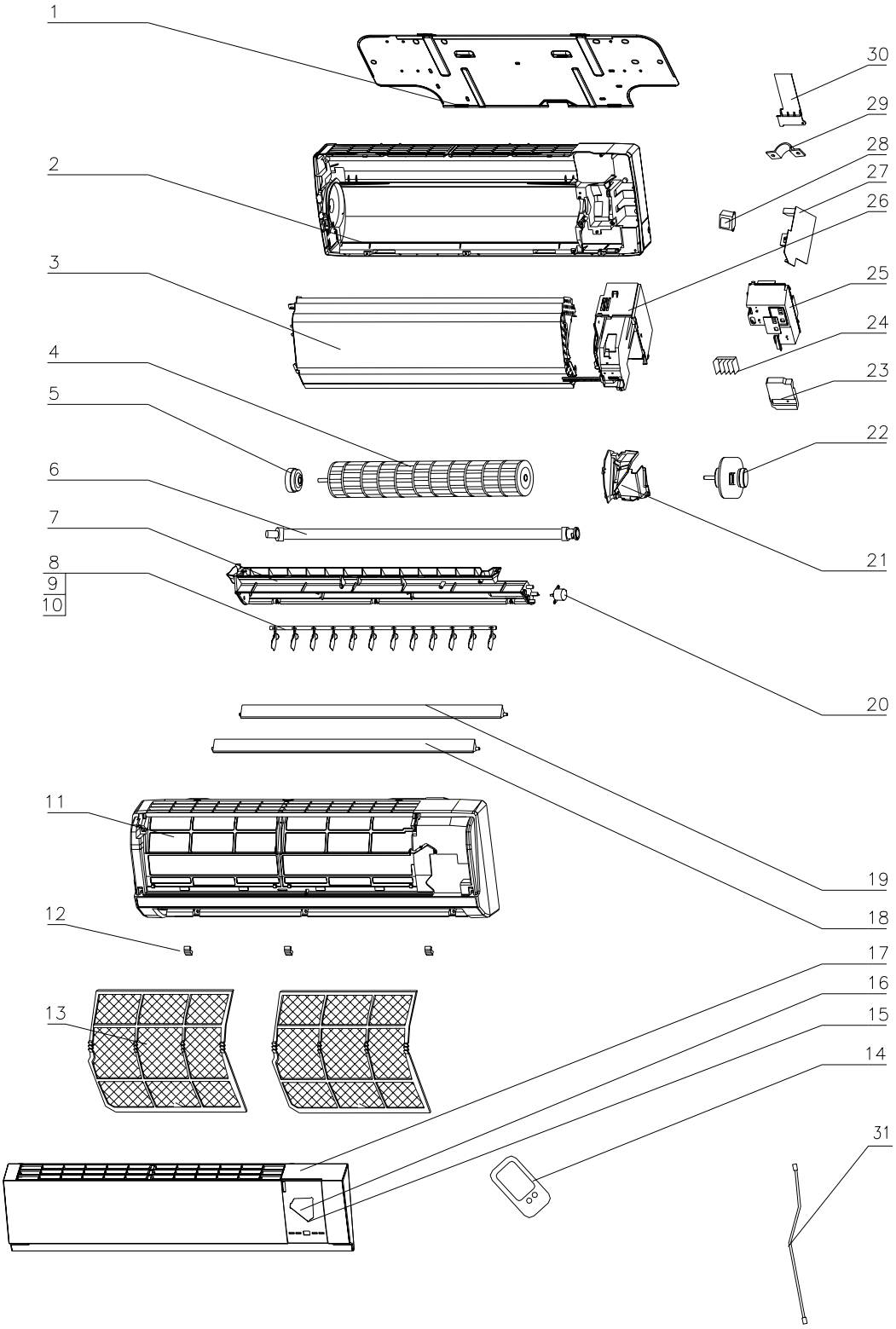

No.	Part Name	GMV(L)-R22G/NaB-K,GMV(L)-R28G/NaB-K	
		Code	Qty.
1	Wall-Mounting Frame	01252220	1
2	Rear Case	222020012	1
3	Evaporator Assy	01004628	1
4	Cross Flow Fan	10352001	1
5	Ring of Bearing	76512203	1
6	Drainage hose	0523001401	1
7	Water Tray	20182027	1
8	Swing Louver	10512032	1
9	Swing Linkage 1	10582002	1
10	Swing Linkage 2	10582003	1
11	Front Case	20002215	1
12	Screw Cover	24252006	3
13	Filter	11122002	2
14	Remote Control Y612C	305125033	1
15	Decorate Piece	68012019	1
16	Receiver Board	30545702	1
17	Front Panel	20002209	1
18	Guide Louver 2	10512034	1
19	Guide Louver 1	10512033	1
20	Motor MP28VA	15212110	1
21	Motor Clamp A	26112017	1
22	Motor FN14A	150121081	1
23	Electric Box Cover	22242030	1
24	Terminal Board T4B3A	42011233	1
25	Covering Plate	201220061	1
26	Electric Box	20102178	1
27	Main PCB Z6H15C	30226074	1
28	Transformer 48X26F	43110226	1
29	Wire Clamp	71010103	1
30	Rear Clamp	24242001	1
31	Signal Cable	400103953	1

(2) GMV(L)-R36G/NaB-K；GMV(L)-R45G/NaB-K

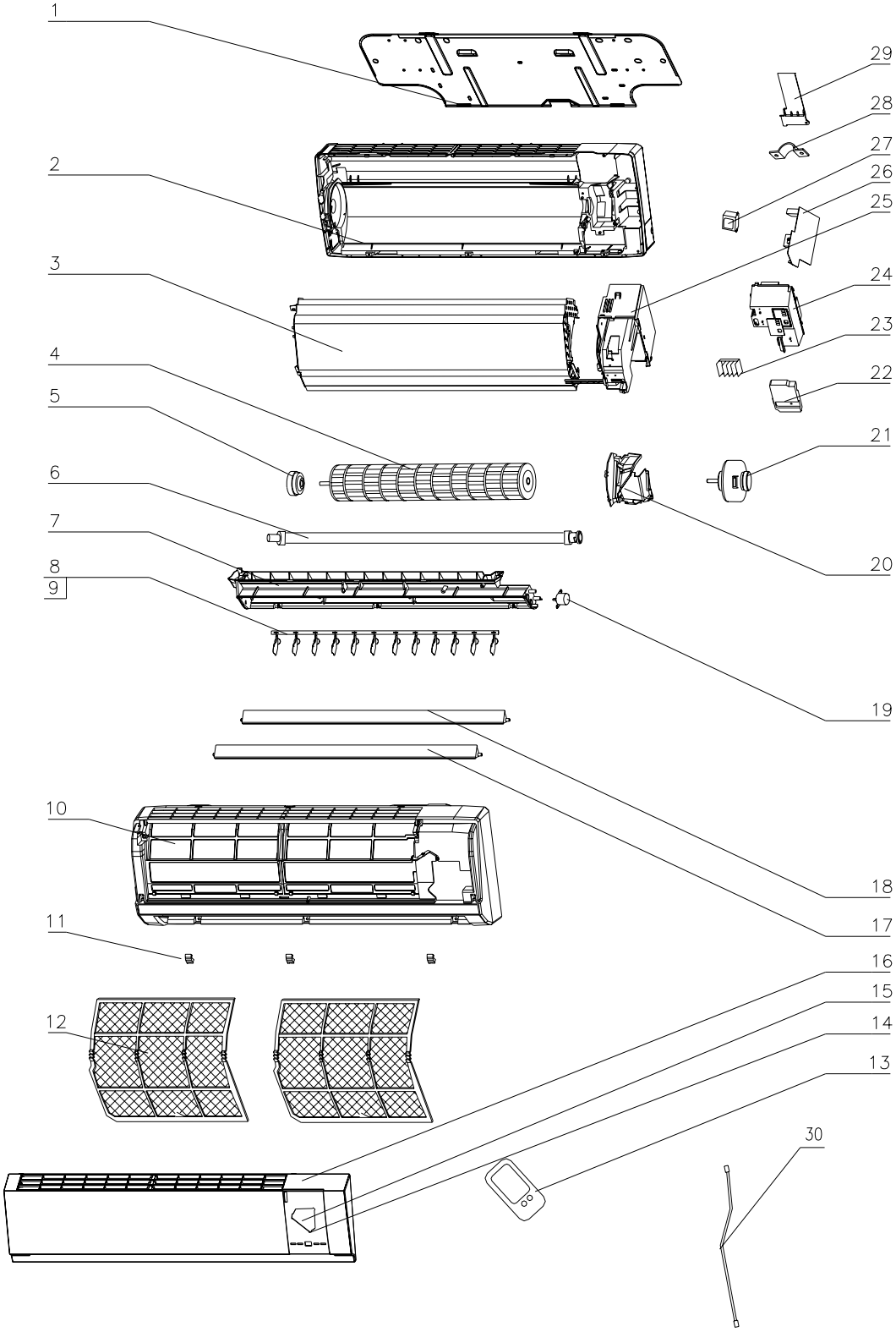

No.	Part Name	GMV(L)-R36G/NaB-K；GMV(L)-R45G/NaB-K	
		Code	Qty.
1	Wall-Mounting Frame	01252384	1
2	Rear Case	22202050	1
3	Evaporator Assy	01004629	1
4	Cross Flow Fan	10352005	1
5	Ring of Bearing	76712015	1
6	Drainage hose	05232411	1
7	Water Tray	20182030	1
8	Swing Louver	10512041	12
9	Swing Linkage	10582439	1
10	Front Case	200022955	1
11	Screw Cover	24252007	3
12	Filter	11122440	2
13	Remote Control Y612C	305160051	1
14	Decorate Piece	68012019	1
15	Receiver Board	30545552	1
16	Front Panel	20002292	1
17	Guide Louver	26112043	1
18	Guide Louver	26112042	1
19	Motor MP28EA	15212105	1
20	Right Motor Clamp	26112429	1
21	Motor FN22A	15012062	1
22	Electric Box Cover	22242017	1
23	Terminal Board T4B3A	42011233	1
24	Covering Plate	20102119	1
25	Electric Box	20102108	1
26	Main PCB Z6J15C	30226072	1
27	Transformer 48X26F	43110226	1
28	Wire Clamp	71010103	1
29	Rear Clamp	26112430	1
30	Signal Cable	400103953	1

(3) GMV(L)-R50G/NaB-K；GMV(L)-R56G/NaB-K

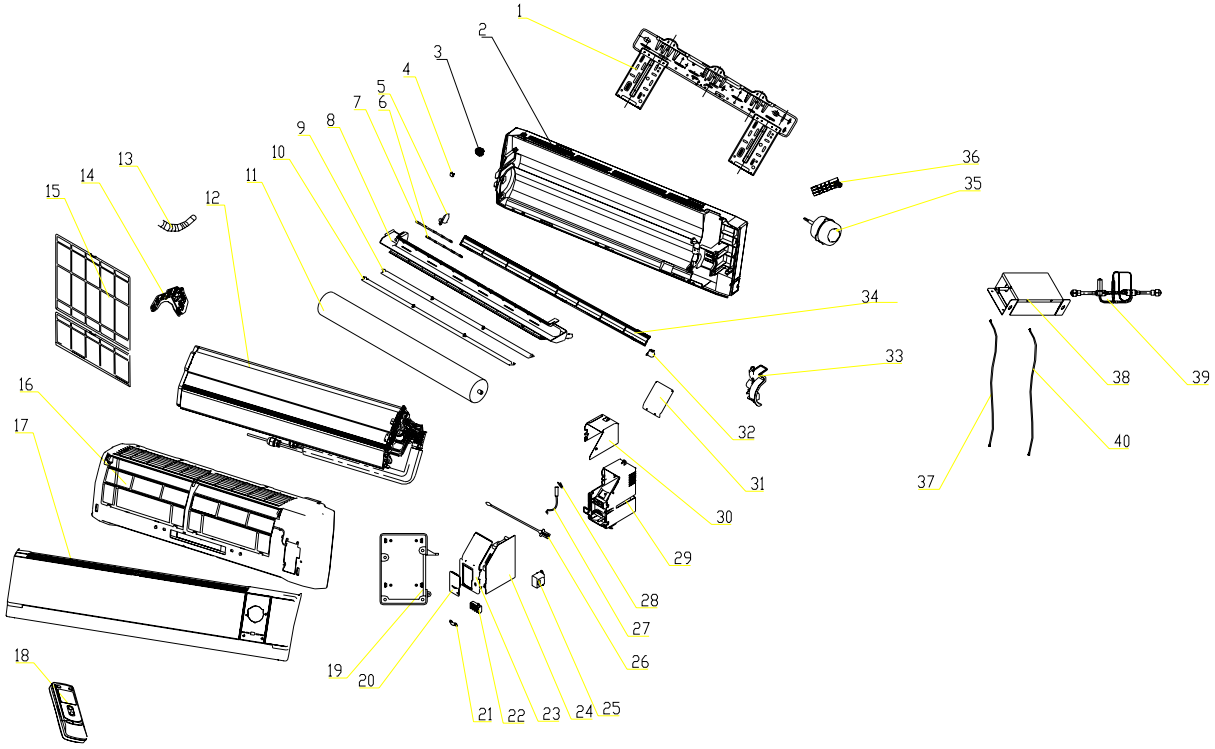

No.	Part Name	GMV(L)-R50G/NaB-K；GMV(L)-R56G/NaB-K	
		Code	Qty.
1	Wall-Mounting Frame	`01252004	1
2	Rear Case	`22202329	1
3	Fan Bearing	`76512203	1
4	Screw Cover	`24252015	3
5	Swing Louver	`10512429	11
6	Swing Link 1	`10582057	1
7	Swing Link 2	`10582058	1
8	Water Tray	`20182057	1
9	Guide Louver（up）	`10512085	1
10	Guide Louver（down）	`10512086	1
11	Cross Flow Fan	`10352022	1
12	Evaporator Assy	`01024147	1
13	Drainage hose	`0523001403	1
14	Evaporator Support	`24212067	1
15	Filter	`11122048	2
16	Front Case	`200026529	1
17	Front Panel	`01544115	1
18	Remote Controller Y512	`305125063	1
19	Displaying Light Board	`22432071	1
20	Electric Box Cover 1	`20112019	1
21	Wire Clamp	`71010103	1
22	Terminal Board T4B3A	`42011233	1
23	Electric Box Cover	`20112020	1
24	Main PCB	`30226116	1
25	Transformer 57X25C	`43110237	1
26	Room Sensor 15k	`3900019813	1
27	Tube Sensor 20k	`3900019814	1
		`3900019815	1
		`3900019816	1
28	Sensor Insert	`42020063	3
29	Electric Box	`20112018	1
30	Lower Shield of Electric Box	`01592037	1
31	Upper Shield of Electric Box	`01592038	1
32	Stepping Motor MP35XY	`15212117	1
33	Motor Clamp	26112095	1
34	Helicoid tongue	`26252009	
35	Motor FN20C-PG	`150120671	1
36	Pipe Clamp	`24242001	1
37	Signal Cable	`400103953	1
38	Fix sub-assy	`01324110P	1
39	EXV sub-assy	`07334255	1
40	Connecting Wire	`40010267	1

(4) GMV(L)-R71G/Na-K；GMV(L)-R80G/Na-K

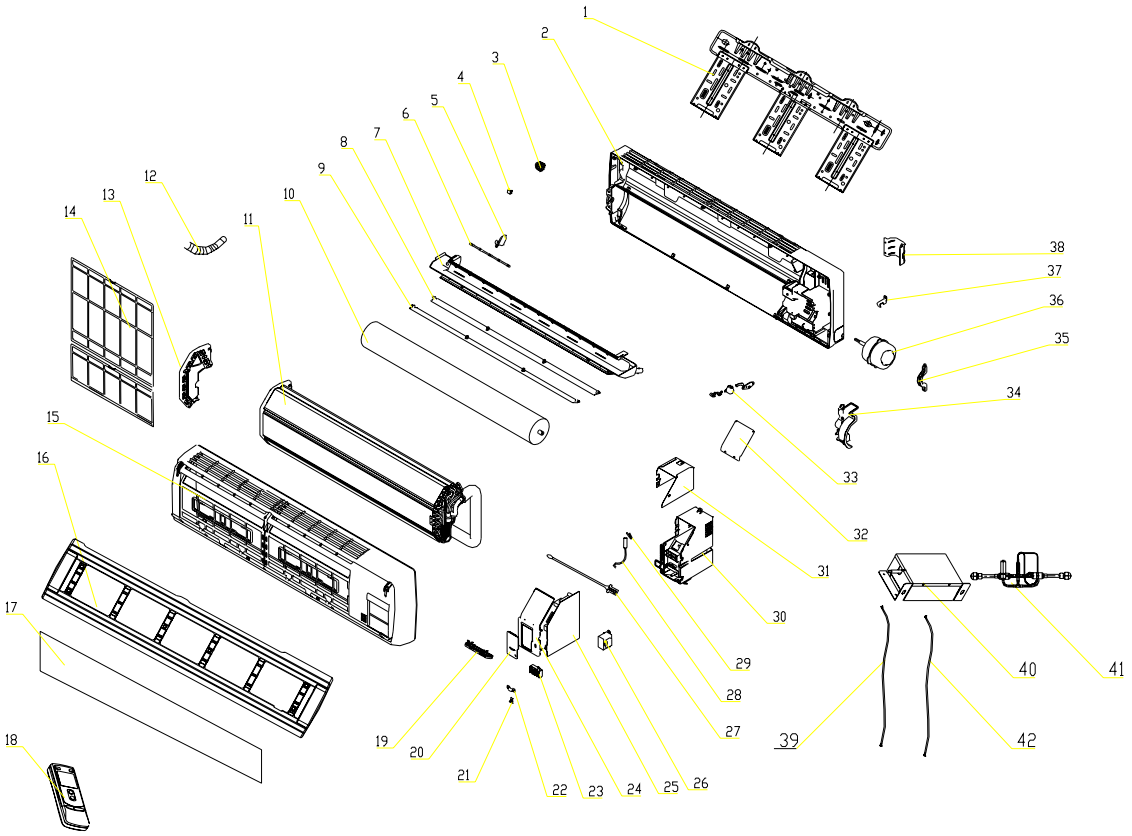

No.	Part Name	GMV(L)-R71G/Na-K；GMV(L)-R80G/Na-K	
		Code	Qty.
1	Wall-Mounting Frame	` 01252398	1
2	Rear Case	` 22202091	1
3	Fan Bearing	` 76512203	1
4	Screw Cover	` 242520053	3
5	Swing Louver	` 10512110	15
6	Swing Link	` 10582040	3
7	Water Tray	` 20182043	1
8	Guide Louver（up）	` 10512062	1
9	Guide Louver（down）	` 10512063	1
10	Cross Flow Fan	` 10352420	1
11	Evaporator Assy	` 0102411202	1
12	Drainage hose	` 0523001404	1
13	Evaporator Support（left）	` 24212041	1
14	Filter	` 11122051	2
15	Front Case	` 26904107	1
16	Front Panel	` 20002698	1
17	Front Panel A	` 22432258	1
18	Remote Controller Y512	` 305125063	1
19	Receiver Board JD	` 30046093	1
20	Electric Box Cover	` 20102252	1
21	Switch Lever	` 10582007	1
22	Wire Clamp	` 71010103	1
23	Terminal Board T4B3A	` 42011233	1
24	Electric Box Cover	` 201022513	1
25	Main PCB	` 30226420	1
26	Transformer 48X26G	` 43110233	1
27	Room Sensor	`3900019813	1
28	Tube Sensor	`3900019814	1
		`3900019815	1
		`3900019816	1
29	Sensor Insert	` 42020063	3
30	Electric Box	` 20102250	1
31	Lower Shield of Electric Box	` 01592034	1
32	Upper Shield of Electric Box	` 01592033	1
33	Stepping Motor MP24GA	15212102	1
34	Evaporator Support（rihgt）	` 24212042	1
35	Motor Clamp	` 26112069	1
36	Motor FN26D	` 150121053	1
37	Fixer(evaporator)	` 02112009	1
38	Pipe Clamp	` 26112071	1
39	Signal Cable	`400103953	1
40	Fix sub-assy	`01324110P	1
41	EXV sub-assy	`07334255	1
42	Connecting Wire	`40010267	1

(5) GMV(L)-R22G/NaC-K；GMV(L)-R28G/NaC-K

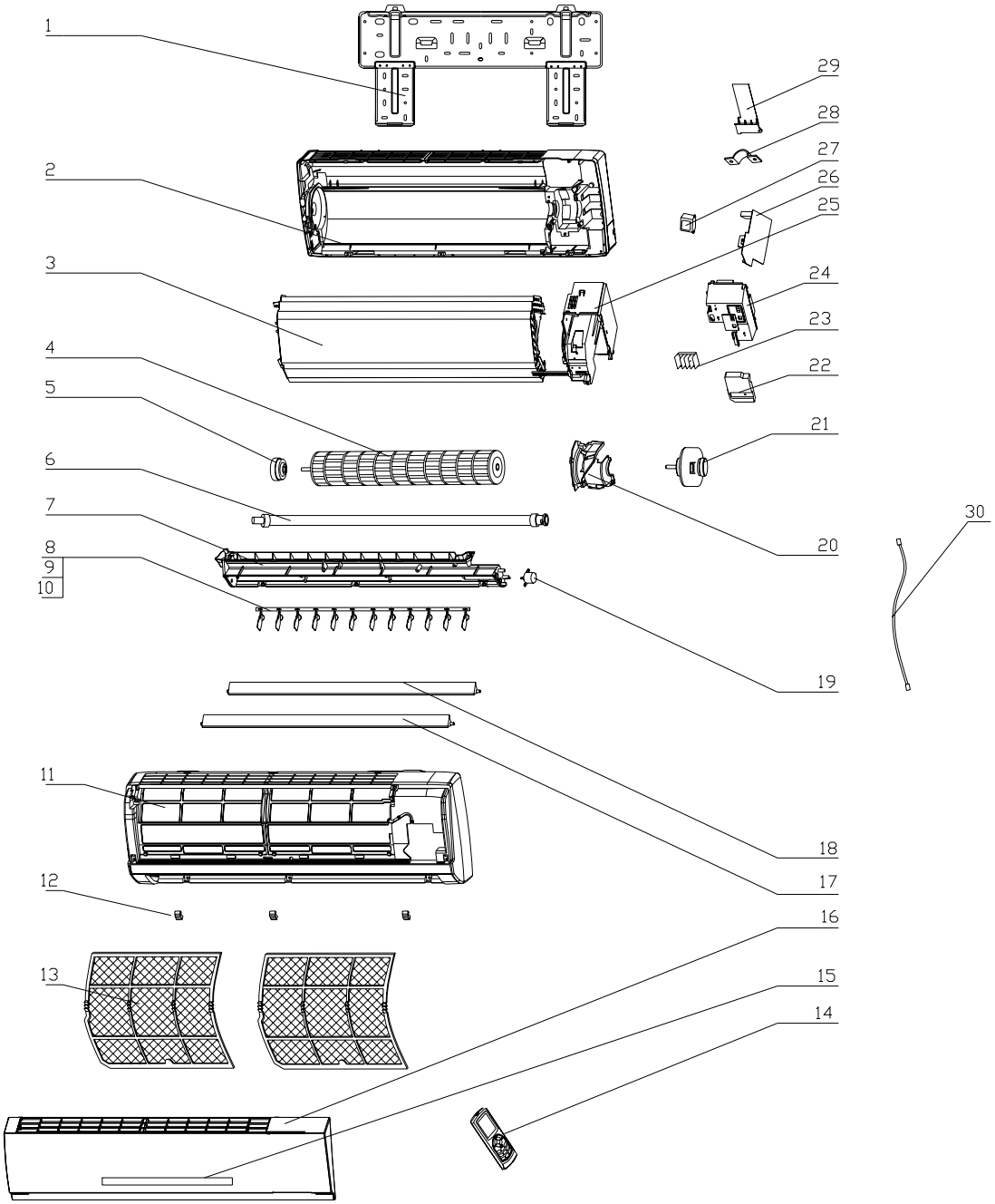

No.	Part Name	GMV(L)-R22G/NaC-K；GMV(L)-R28G/NaC-K	
		Code	Qty.
1	Wall Mounting Frame	01252220	1
2	Rear Case	222020012	1
3	Evaporator Assy	01004628	1
4	Cross Flow Fan	10352001	1
5	O-Gasket of Cross Fan Bearing	76512203	1
6	Drain Pipe	0523001401	1
7	Water Tray	201820272	1
8	Air Louver	10512080	1
9	Swing Lever	10582002	1
10	Swing Lever	10582003	1
11	Front Case	200024442	1
12	Screw Cap	24252006	3
13	Filter	11122002	2
14	Remote Control Y512	305125063	1
15	Display Board	30545707	1
16	Front Panel	20002522	1
17	Guide Louver	10512034	1
18	Guide Louver	10512033	1
19	Stepping Motor	15212110	1
20	Motor Press Plate	26112014	1
21	Fan Motor	150121081	1
22	Electric Box Cover	22242030	1
23	4-bit Terminal Board	42011233	1
24	Electric Box Cover	201220061	1
25	Electric Box	20102178	1
26	Main PCB Z6H251B	30226077	1
27	Transformer	43110226	1
28	Fixed Clamp	71010103	1
29	Pipe Clamp	24242001	1
30	Connecting Wire（communicate)	400103953	1

(6) GMV(L)-R36G/NaC-K；GMV(L)-R45G/NaC-K

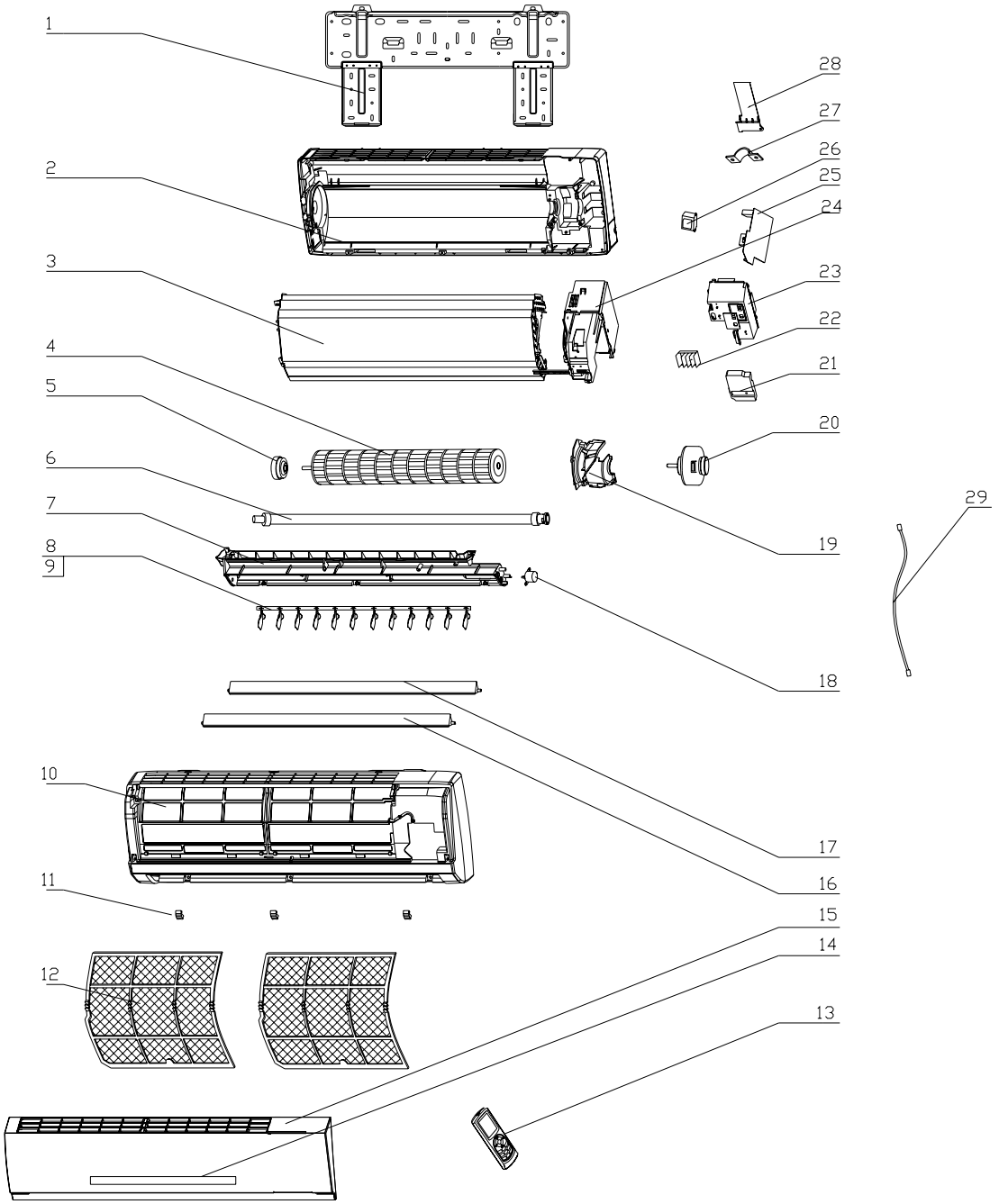

No.	Part Name	GMV(L)-R36G/NaC-K；GMV(L)-R45G/NaC-K	
		Code	Qty.
1	Wall Mounting Frame	01252384	1
2	Rear Case Sub-Assy	22202051	1
3	Evaporator Assy	01004629	1
4	Cross Flow Fan	10352005	1
5	Ring of Bearing	76712015	1
6	Drain Pipe	0523001401	1
7	Water Tray	201820302	1
8	Air Louver	10512041	12
9	Swing Lever	10582439	1
10	Front Case	200025253	1
11	Screw Cap	24252007	3
12	Filter	11122440	2
13	Remote Control Y512	305125063	1
14	Display Board	30545558	1
15	Front Panel	20002524	1
16	Lower Guide Louver	26112043	1
17	Upper Guide Louver	26112042	1
18	Stepping Motor	15212105	1
19	Motor Right Clamp	26112429	1
20	Motor FN22G	150120623	1
21	Electric Box Cover	22242017	1
22	4-bit Terminal Board	42011233	1
23	Covering Plate	20102119	1
24	Electric Box	20102108	1
25	Main PCB Z6J251B	30226075	1
26	Transformer	43110226	1
27	Fixed Clamp	71010103	1
28	Rear Clamp	26112430	1
29	Connecting Wire（communicate)	400103953	1

5.2 .4 Floor Ceiling Type Unit

(1) GMV(L)-R28Zd/Na-K,GMV(L)-R36Zd/Na-K,GMV(L)-R50Zd/Na-K

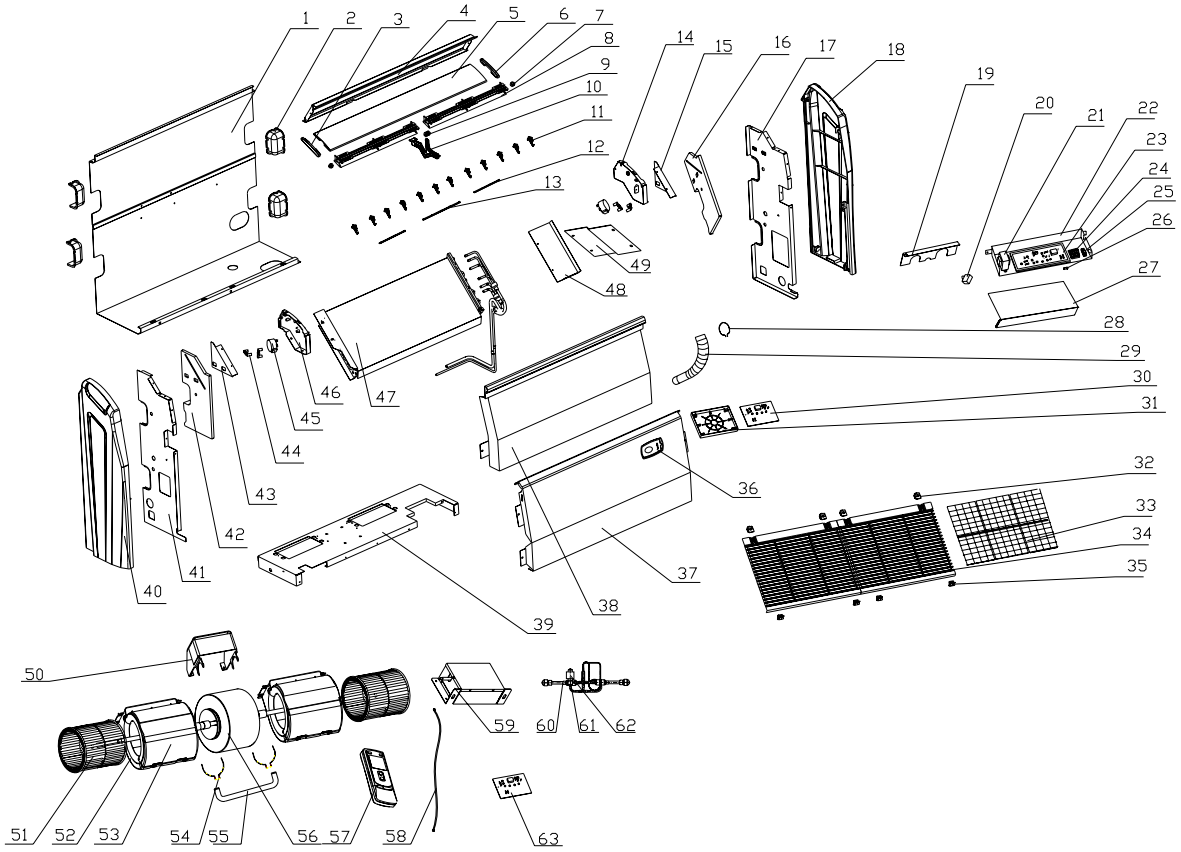

No.	Part Name	GMV(L)-R28Zd/Na-K,GMV(L)-R36Zd/Na-K,GMV(L)-R50Zd/Na-K	
		Code	Qty.
1	Rear Side Plate	01302013	1
2	Handle	26232001	4
3	Left Decoration Plate	261124152	1
4	Rear Side Plate of Air Outlet	0130201501	1
5	Louver	1051953202	1
6	Right Decoration Plate	261124162	1
7	Shaft of Louver II	10512026	2
8	Louver Support	24212019	2
9	Shaft of Louver I	10512025	1
10	Louver Fixer	24212018	1
11	Swing Louver	10512027	12
12	Connecting Lever	10582009	1
13	Connecting Lever	10582008	2
14	Right Swing Motor Fixer	26152006	1
15	Right Fixing Plate of Evaporator	01072411	1
16	Right Side Foam sub-assy	12312404	1
17	Right Fixing Plate	01332404	1
18	Right Decoration Panel	26112027	1
19	Pipe Clamp Plate	0107243701	1
20	Capacitor 1uF/500V	33010089	1
21	Transformer 57X25C	43110237	1
22	Electric Box	01402407	1
23	Main PCB Z6935	30226903	1
24	Terminal Board RS9413G	42011159	1
25	Wire Base	24253001	1
	Wire Clamp	24253002	1
26	Fuse 5A 250VAC	46010013	1
27	Cover of Electric Box	01412408	1
28	Pipe Clip	70812001	1
29	Drainage hose	05235433	1
30	Display Board 5T52	30545654	1
31	Electric Box	20102138	1
32	Front Grill Clip 1	26252002	4
33	Filter	11122013	2
34	Front Grill	22412010	2
35	Front Grill Clip 2	26252003	4
36	Front Panel	01544106	1
37	Front Panel	01532001P	1
38	Water Tray Panel	01272205P	1
39	Motor Support	01709532	1
40	Left Decoration Panel	26112028	1
41	Left Fixing Plate	01332405	1

No.	Part Name	GMV(L)-R28Zd/Na-K,GMV(L)-R36Zd/Na-K,GMV(L)-R50Zd/Na-K	
		Code	Qty.
43	Left Fixing Plate of Evaporator	01072410	1
44	Motor Clamp	26112026	4
45	Step Motor MP35CA	15212402	2
46	Left Swing Motor Fixer	26152005	1
47	Evaporator Assy	01024134 ①	1
		01024135 ②	1
		01024121 ③	1
48	Water Lead Panel	01362001	1
49	Cover of Evaporator	01072409	1
50	Fixed Mount	01708763	1
51	Centrifugal Fan	10312401	2
52	Rear Snail Shell	22202032	2
53	Front Snail Shell	22202031	2
54	Bar Clasp	70819522	4
55	Hoop	70819521	1
56	Motor	15707302 ④	1
		157073024 ⑤	1
57	Remote Controller	305125063	1
58	Signal Cable	400103953	1
59	Fix sub-assy	01324110P	1
60	EXV sub-assy	07334258	1
61	EXV SPF-16D70	07334191	1
62	Magnet Coil for EXV DPF-AS001A	430001087	1
63	Display Board Z63351F	30296309	1

Note:

11. Evaporator Assy ① is only applicable to GMV(L)-R28Zd/Na-K
12. Evaporator Assy ② is only applicable to GMV(L)-R36Zd/Na-K
13. Evaporator Assy ③ is only applicable to GMV(L)-R50Zd/Na-K
14. Motor ④ is only applicable to GMV(L)-R28Zd/Na-K,GMV(L)-R36Zd/Na-KMotor
15. Motor⑤ is only applicable to GMV(L)-R50Zd/Na-K

(2) GMV(L)-R71Zd/Na-K

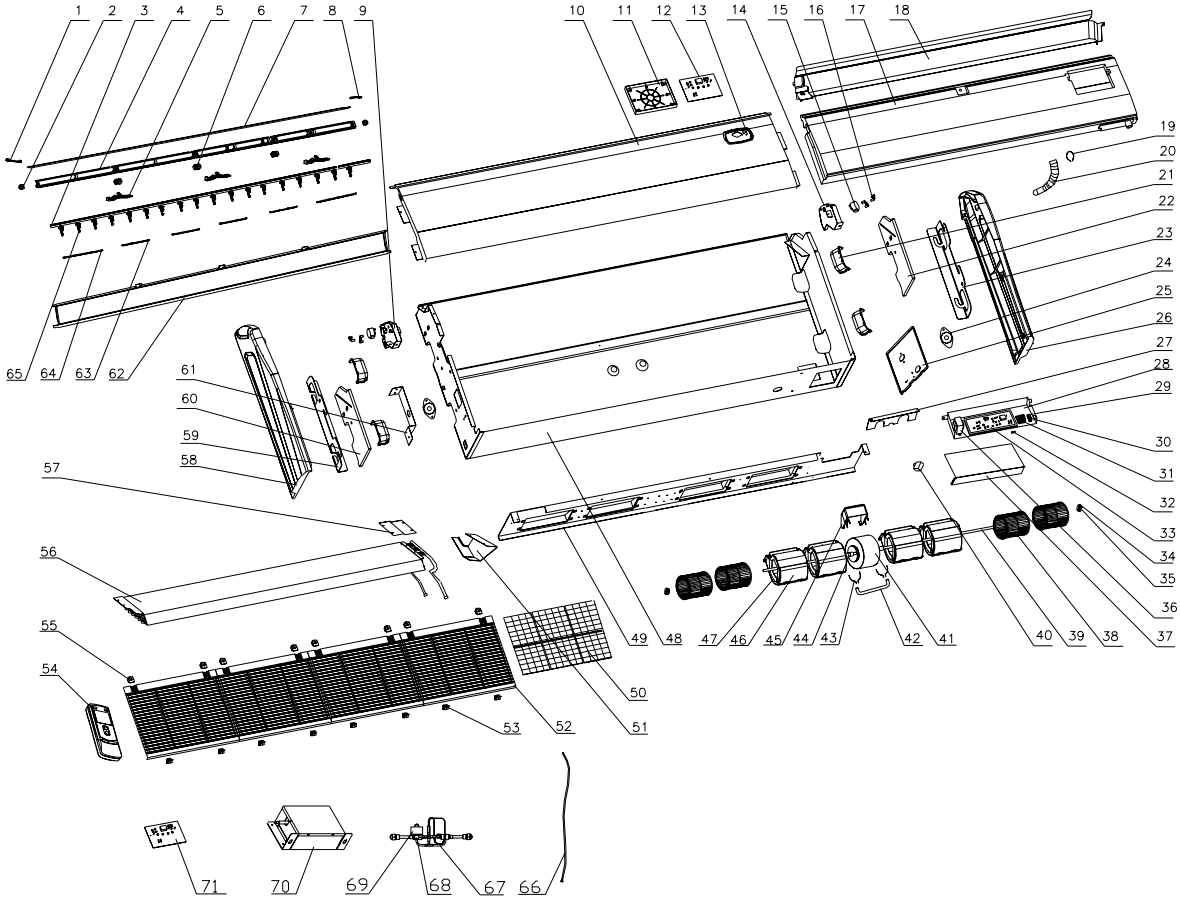

No.	Part Name	GMV(L)-R71Zd/Na-K	
		Code	Qty.
1	Left Decoration Plate	261124172	1
2	Shaft of Louver I	10512025	2
3	Swing Louver Fixer sub-assy	013324232	1
4	Louver Support	24212020	3
5	Louver Fixer	24222016	2
6	Louver	105124042	1
7	Shaft of Louver II	10512026	2
8	Right Decoration Plate	261124212	1
9	Left Swing Motor Fixer	26152007	1
10	Front Panel	01532414	1
11	Display Box	20102138	1
12	Display Board 5T52	30545654	1
13	Front Panel	01544106	1
14	Right Swing Motor Fixer	26152008	1
15	Step Motor MP35CA	15212402	2
16	Motor Clamp	26112026	4
17	Water Tray	01272412	1
18	Auxiliary Water Tray	01272413	1
19	Pipe Clip	70812001	1
20	Drainage hose	05235433	1
21	Handle	26232001	4
22	Right Side Foam sub-assy	12312407	1
23	Right Fixing Palte	01332404	1
24	Support of Motor Bearing	01792408	2
25	Fixer of Motor Support	01792409	1
26	Right Decoration Panel	26112033	1
27	Pipe Clamp	01072424	1
28	Electric Box	01402407	1
29	Wire Base	24253001	1
30	Wire Clamp	24253002	1
31	Terminal Board	42011159	1
32	Fuse 5A 250VAC	46010013	1
33	Main PCB Z6935	30226903	1
34	Ring of Bearing	76512404	2
35	Fan Bearing	76512210	2
36	Transformer 57X25C	43110237	1
37	Cover of Electric Box	01412408	1
38	Centrifugal Fan	10312401	4
39	Rotary Axis	73012401	2
40	Capacitor CBB61 3uF/450	33010027	1
41	Motor FN100A	15012406	1
42	Motor Fixer	01722409	1
43	Motor Clamp	01702405	2
44	Axes Connector	73012403	2

45	Motor Fixing Plate	01332426	1
46	Front Snail Shell	22202031	4
47	Rear Snail Shell	22202032	4
48	Rear Side Plate	01302429	1
49	Motor Support	01702410	1
50	Filter	11122012	2
51	Water Lead Plate	01362401	1
52	Front Grill	22412011	2
53	Front Grill Clip 2	26252003	4
54	Remote Controller	305125063	1
55	Front Grill Clip 1	26252002	4
56	Evaporator Assy	01024123	1
57	Cover of Evaporator	01072417	1
58	Left Decoration Panel	26112032	1
59	Left Fixing Plate	01332405	1
60	Left Side Foam sub-assy	12312406	1
61	Bearing Fixing Plate	01332407	1
62	Rear Side Plate of Air Outlet	01302405	1
63	Connecting Lever	10582008	3
64	Connecting Lever	10582009	2
65	Swing Louver	10512028	22
66	Signal Cable	400103953	1
67	EXV sub-assy	07334255	1
68	EXV SPF-18D88	07334193	1
69	Magnet Coil for EXV	430001087	1
70	Fix sub-assy	01324110P	1
71	Display Board Z63351F	30296309	1

(3) GMV(L)-R90Zd/Na-K,GMV(L)-R112Zd/Na-K,GMV(L)-R125Zd/Na-K

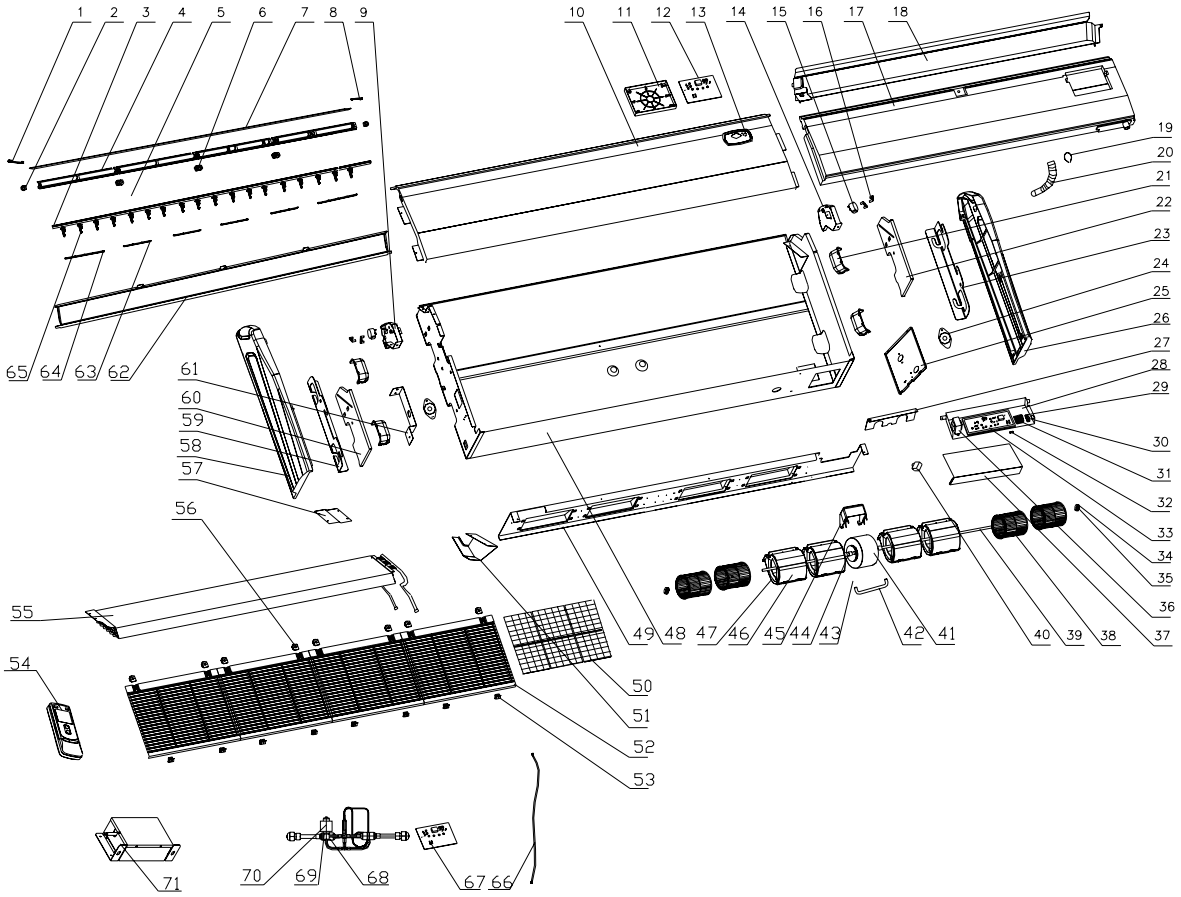

No.	Part Name	GMV(L)-R71Zd/Na-K	
		Code	Qty.
1	Left Decoration Plate	261124152	1
2	Shaft of Louver I	10512025	3
3	Swing Louver Fixer sub-assy	0133241802	1
4	Louver Support	24212019	4
5	Louver Fixer	24212018	3
6	Shaft of Louver II	10512026	2
7	Louver	105124082	1
8	Right Decoration Plate	261124162	1
9	Left Swing Motor Fixer	26152005	1
10	Front Panel	01532413	1
11	Display Box	20102138	1
12	Display Board 5T52	30545654	1
13	Front Panel	01544106	1
14	Right Swing Motor Fixer	26152006	1
15	Step Motor MP35CA	15212402	2
16	Motor Clamp	26112026	4
17	Water Tray	0127240802	1
18	Auxiliary Water Tray	01272409	1
19	Pipe Clip	70812001	1
20	Drainage hose	05235433	1
21	Handle	26232001	4
22	Right Side Foam sub-assy	12312404	1
23	Right Fixing Palte	01332404	1
24	Support of Motor Bearing	01792408	2
25	Fixer of Motor Support	01792407	1
26	Right Decoration Panel	26112027	1
27	Pipe Clamp	01072425	1
28	Electric Box	01402407	1
29	Wire Base	24253001	1
30	Wire Clamp	24253002	1
31	Terminal Board	42011159	1
32	Fuse 5A 250VAC	46010013	1
33	Main PCB Z6935	30226903	1
34	Ring of Bearing	76512404	2
35	Fan Bearing	76512210	1
36	Transformer 57×25C	43110237	1
37	Cover of Electric Box	01412408	1
38	Centrifugal Fan	10319051	4
39	Rotary Axis	73012402	2
40	Capacitor	33010064 ①	1
		33010056 ②	1
41	Motor	15012405 ③	1
		15012404 ④	1
42	Motor Fixer	01722410	1

43	Motor Clamp	01702405	2
44	Axes Connector	73012403	2
45	Motor Fixing Plate	01332425	1
46	Front Snail Shell	22202030	4
47	Rear Snail Shell	22202029	4
48	Rear Side Plate	01302431	1
49	Motor Support	01702411	1
50	Filter	11122013	1
51	Water Lead Plate	01362407	1
52	Front Grill	22412010	4
53	Front Grill Clip 2	26252003	8
54	Remote Controller	305125063	1
55	Evaporator Assy	01024122	1
56	Front Grill Clip 1	26252002	8
57	Cover of Evaporator	01072409	1
58	Left Decoration Panel	26112028	1
59	Left Fixing Plate	01332405	1
60	Left Side Foam sub-assy	12312403	1
61	Bearing Fixing Plate	01332406	1
62	Rear Side Plate of Air Outlet	01302416	1
63	Connecting Lever	10582008	2
64	Connecting Lever	10582009	4
65	Swing Louver	10512027	26
66	Signal Cable	400103953	1
67	Display Board Z63351F	30296309	1
68	EXV sub-assy	07334256	1
69	EXV VPF-25D*B3	07334195	1
70	Magnet Coil for EXV	43000110	1
71	Fix sub-assy 2	01324110P	1

Note:

16. Capacitor ① is only applicable to GMV(L)-R90Zd/Na-K
17. Capacitor ② is only applicable to GMV(L)-R112Zd/Na-K,GMV(L)-R125Zd/Na-K
18. Motor ③ is only applicable to GMV(L)-R90Zd/Na-K
19. Motor ④ is only applicable to GMV(L)-R112Zd/Na-K,GMV(L)-R125Zd/Na-K

5.2.5 1-way cassette Type Unit

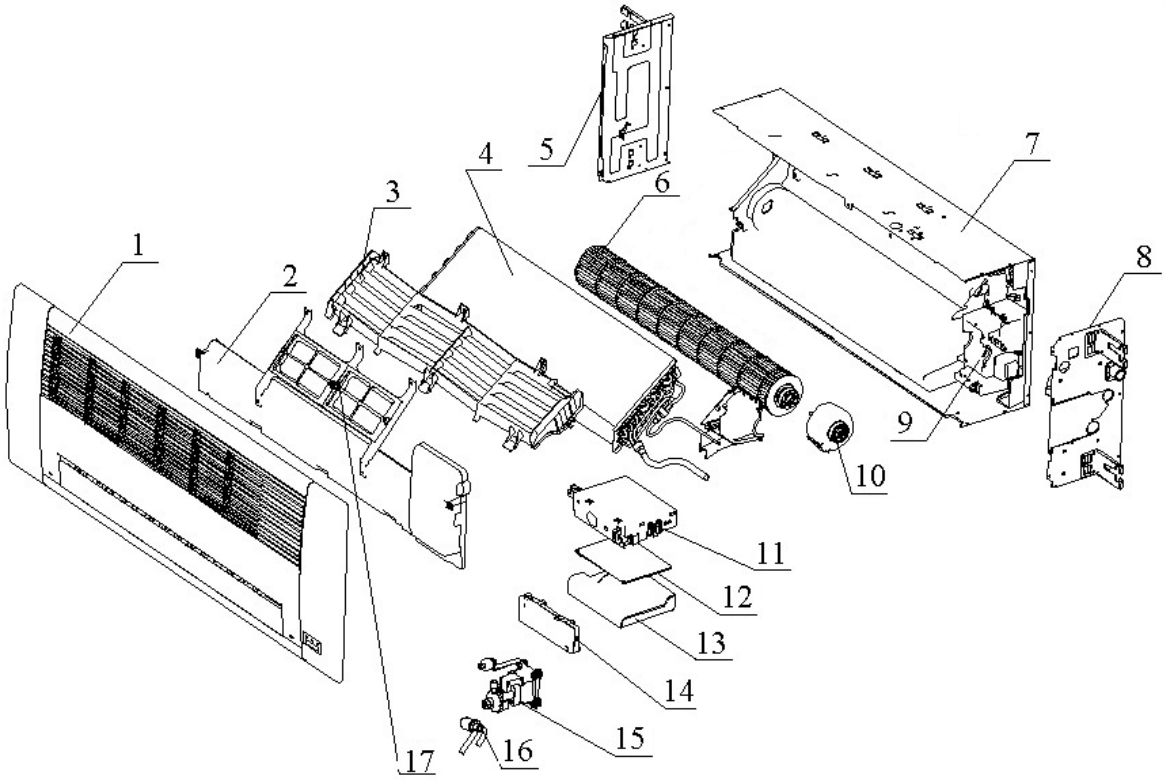

(1) GMV(L)-R22Td/Na-K

No.	Part Name	Qty.	Code	
			GMV-R22Td/Na	GMVL-R22Td/Na
1	Front Panel Assy (MT01)	1	TL1000120	TL1000120
2	Water Tray Assy	1	12412702	12412702
3	引水架	1	24212708	24212708
4	Evaporator Assy	1	01024103	01024103
5	Left Side Plate Assy	1	01302729	01302729
6	Cross Flow Fan	1	10352701	10352701
7	Base Plate Assy	1	01222714	01222714
8	Right Side Plate Assy	1	01302746	01302746
9	Rear Case assy	1	22202702	22202702
10	Fan Motor	1	1570410401	1570410401
11	Electric Box Assy	1	01404655	01404697
12	Main Board	1	30226034	30226033
13	Electric Box Cover Plate	1	01412725	01412725
14	Terminal Board Cover	1	222427221	222427221
15	Drainage Pump	1	43132701	43132701
16	Electronic Expansion Valve	1	07334129	07334129
17	Supporter	1	01792703	01792703

(2)GMV(L)-R28Td/Na-K、GMV(L)-R36Td/Na-K

No.	Part Name	Qty.	Code	
			GMV-R28Td/H；GMV-R36Td/H	GMVL-R28Td/H；GMVL-R36Td/H
1	Front Panel Assy (MT01)	1	TL1000120	TL1000120
2	Water Tray Assy	1	12412702	12412702
3	Water Lead Panel	1	24212708	24212708

4	Evaporator Assy	1	01024104	01024104
5	Left Side Plate Assy	1	01302729	01302729
6	Cross Flow Fan	1	10352701	10352701
7	Base Plate Assy	1	01222714	01222714
8	Right Side Plate Assy	1	01302746	01302746
9	Rear Case assy	1	22202702	22202702
10	Fan Motor	1	1570410401	1570410401
11	Electric Box Assy	1	01404655	01404697
12	Main Board	1	30226034	30226033
13	Electric Box Cover Plate	1	01412725	01412725
14	Terminal Board Cover	1	222427221	222427221
15	Drainage Pump	1	43132701	43132701
16	Electronic Expansion Valve	1	07334129	07334129
17	Supporter	1	01792703	01792703